ServiceWire Co.
Manufacturing quality. Delivering service.
Made in the USA
ISO 9001:2008

Table of Contents

Bare Copper ..... **2 – 5**
- *Solid* *2*
- *Plater* *3*
- *Stranded* ..... *4 – 5*

Single Conductor ..... **6 – 23**
- *XHHW-2* ..... *6 – 8*
- *SIS* *9*
- *USE-2/RHH/RHW-2* ..... *10 – 12*
- *Jacketed Singles* ..... *13 – 15*
- *Photovoltaic Wire* ..... *16 – 20*
- *THW and THW-2* ..... *21 – 22*
- *Weatherproof Line Wire* *23*
- *Cathodic Protection* *24*
- *Transformer Riser Wire* *25*

Twisted Cables ..... **26 – 34**
- *ServicePlex®* ..... *26 – 27*
- *Copper Service Drop* *28*
- *400 Hz Cable* ..... *29 – 30*
- *Preassembled Aerial* ..... *31 – 34*

Tray and Power Cables ..... **35 – 53**
- *SER/SEU* ..... *35 – 36*
- *Tray Cable* ..... *37 – 45*
- *Shielded Tray Cable* ..... *46 – 53*

ASD/VFD ServiceDrive® System ..... **54 – 62**
- *Cable* ..... *54 – 57*
- *Connectors* ..... *60 – 61*
- *Termination Kits* *62*

Armored Cables ..... **63 – 78**
- *Feeder MC Cable and Connectors* ..... *63 – 65*
- *Jacketed MC Cable and Connectors* ..... *66 – 69*
- *EnviroPlus® Armor (LSZH)* ..... *70 – 71*
- *ServiceTeck® (Teck90) Cable and Connectors* ..... *72 – 74*
- *2KV MC* ..... *75 – 76*
- *Medium Voltage MC* ..... *77 – 78*

Pump Cable ..... **79 – 83**
Irrigation Cable ..... **85 – 88**
Contact Wire ..... **89 – 92**
Messenger for Aerial **93**
Color Codes **94**
Minimum Bending Radii **95**
Maximum Pull Tensions **96**
Sheave Selection Chart **97**
Cable Installation Tips ..... **98 – 100**
Conversion Factors **101**
Terms and Conditions ..... **102 – 103**

servicewire.com

Phoenix, AZ **877-623-9473**
Culloden, WV **800-624-3572**
Houston, TX **800-231-9473**

RETURN to Table of Contents

ServiceWire Co.
Manufacturing quality. Delivering service.
Made in the USA
ISO 9001: 2008

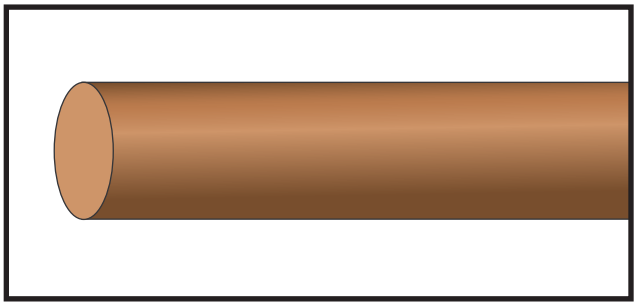

Bare Copper Solid Conductor

Bare or Tinned, Soft (Annealed), Medium Hard, Hard Drawn

Application:
Suitable for use in electrical grounding systems and on insulators for overhead transmission and distribution applications.

Standards:
ASTM Standards:
- B-1 (hard drawn)
- B-2 (medium hard drawn)
- B-3 (soft or annealed)
- B-33 (tinned)

REA/RUS Approved
Federal Standard QQ-W-343
RoHS Compliant

	Part Number	Size AWG	Nominal Diameter (inch)	Approx. Net Weight (lb/1000')	Hard Drawn		Medium Hard Drawn		Soft (annealed)		Ampacity*
					Min. Breaking Strength (lbs.)	DC Resistance (OHMS/1000') @ 20°C	Min. Breaking Strength (lbs.)	DC Resistance (OHMS/1000') @ 20°C	DC Resistance (OHMS/1000') @ 20°C		
									Bare	Tinned	
SOLID BARE COPPER	BSOS18	18	0.0403	4.92	85	6.6400	67	6.6100	6.3900	6.6400	-
	BSOS16	16	0.0508	7.82	135	4.1800	106	4.1600	4.0200	4.1800	-
	BSOS14	14	0.0641	12.43	214	2.6300	167	2.6100	2.5200	2.6200	-
	BSOS12	12	0.0808	19.77	337	1.6500	262	1.6400	1.5900	1.6500	-
	BSOS10	10	0.1019	31.43	529	1.0390	410	1.0330	0.9988	1.0430	-
	BSOS8	8	0.1285	49.98	826	0.6532	644	0.6498	0.6281	0.6426	98
	BSOS6	6	0.1620	79.46	1,280	0.4110	1,010	0.4088	0.3952	0.4109	124
	BSOS4	4	0.2043	126.40	1,970	0.2584	1,584	0.2571	0.2485	0.2528	155
	BSOS2	2	0.2576	200.90	3,002	0.1625	2,450	0.1617	0.1563	0.1580	209
	BSOS1	1	0.2893	253.30	3,688	0.1289	3,024	0.1282	0.1239	-	-
	BSOS1/0	1/0	0.3249	319.50	4,518	0.1011	3,731	0.1016	0.0982	-	282
	BSOS2/0	2/0	0.3648	402.80	5,519	0.0802	4,600	0.0798	0.0779	-	329
	BSOS3/0	3/0	0.4096	507.80	6,720	0.0636	5,666	0.0633	0.0618	-	382
	BSOS4/0	4/0	0.4600	640.50	8,143	0.0504	6,980	0.0502	0.0490	-	444

*Per NEC Table 310.15 (B)(21). Based on conductor temperature of 80°C; ambient temperature of 40°C; 2 ft./sec. wind.
NOTE: The data shown is approximate and subject to standard industry tolerances.

servicewire.com
Phoenix, AZ 877-623-9473
Culloden, WV 800-624-3572
Houston, TX 800-231-9473

RETURN to Table of Contents

ServiceWire Co.
Manufacturing quality. Delivering service.
Made in the USA
ISO 9001: 2008

Copper Plater Wire

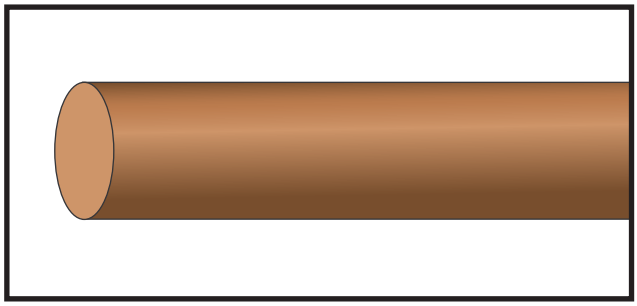

Description:
Solid soft drawn or hard drawn bare copper. Packaged on convenient spools (per ASTM B49).

Application:
Suitable for use as a hanger in the electro-plating industry. Highest conductivity per unit area of all commercially available metals used to conduct electricity. Easily welded and soldered.

Soft Drawn: Flexible, easily formed into place.
Hard Drawn: Higher tensile strengths, respectively, more difficult to form.

Standards:
ASTM Standards:
- B-1 (hard drawn)
- B-3 (soft drawn)
- B-49 (copper rod)

RoHS Compliant

PLATER WIRE/BARE COPPER

Part Number	Conductor AWG	Approximate (ft./lb.)	Standard Put-up Per Carton	Standard Packaging	Weight (lb/1000')
PLATER24	24 Solid	818	6 x 10 lb. Spools	60	1.2
PLATER22	22 Solid	514	6 x 10 lb. Spools	60	1.9
PLATER20	20 Solid	323	6 x 10 lb. Spools	60	3.1
PLATER16	16 Solid	128	6 x 10 lb. Spools	60	7.8
PLATER14	14 Solid	81	2 x 25 lb. Spools	50	12.4
PLATER12	12 Solid	51	2 x 25 lb. Spools	50	19.8
PLATER10	10 Solid	32	2 x 25 lb. Spools	50	31.4
PLATER8	8 Solid	20	2 x 25 lb. Spools	50	50.0
PLATER6	6 Solid	13	2 x 25 lb. Spools	50	79.4
PLATER4	4 Solid	8	2 x 25 lb. Spools	50	126.3
PLATER2	2 Solid	5	2 x 25 lb. Spools	50	200.9

NOTE: The data shown is approximate and subject to standard industry tolerances.

servicewire.com
Phoenix, AZ 877-623-9473
Culloden, WV 800-624-3572
Houston, TX 800-231-9473

RETURN to Table of Contents

ServiceWire Co.
Manufacturing quality. Delivering service.
Made in the USA
ISO 9001: 2008

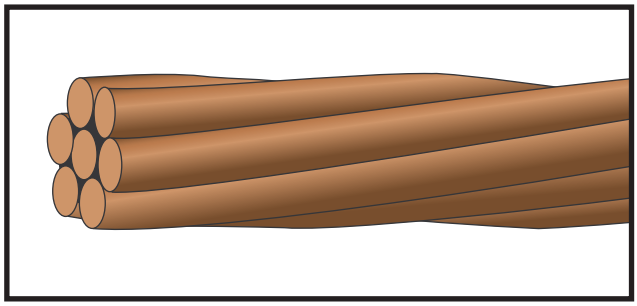

Bare Copper Stranded Conductor

Bare or Tinned, Soft (Annealed), Medium Hard, Hard Drawn

Application:

Suitable for use in electrical grounding systems (including counterpoise grounding) and on insulators for overhead transmission and distribution applications. Stranded conductors offer greater flexibility than solid.

Standards:

ASTM Standards:
- B-1 (hard drawn)
- B-2 (medium hard drawn)
- B-3 (soft or annealed)
- B-8 (concentric lay stranded)
- B-33 (tinned)
- B-787 (combination strand)

REA/RUS Approved
Federal Standard QQ-W-343
RoHS Compliant

	Part Number	Size AWG	Strand (no.)	Stranding Class	Nominal Diameter Overall (inch)	Approx. Net Weight (lb/1000')	Hard Drawn		Medium Hard Drawn		Soft Drawn		Ampacity*
							Min. Breaking Strength (lbs.)	DC Resistance (OHMS/1000') @ 20°C	Min. Breaking Strength (lbs.)	DC Resistance (OHMS/1000') @ 20°C	DC Resistance (OHMS/1000') @ 20°C		
											Bare	Tinned	
STRANDED BARE COPPER	BST26S16	16	26	K	0.058	7.97	124.7	4.2590	100.4	4.2370	4.0960	4.1100	-
	BST7S14	14	7	B	0.073	12.70	197.1	2.6790	157.7	2.6650	2.5800	2.6800	-
	BST7S12	12	7	B	0.092	20.20	311.1	1.6850	247.7	1.6760	1.6200	1.6900	-
	BST7S10	10	7	B	0.115	32.00	491.7	1.0600	388.9	1.0540	1.0200	1.0600	-
	BST7S8	8	7	B	0.143	50.90	777.0	0.6663	610.0	0.6629	0.6408	0.6654	98
	BST7S6	6	7	B	0.181	81.00	1,228.0	0.4191	959.0	0.4169	0.4030	0.4196	124
	BST7S4	4	7	A,B	0.230	128.90	1,938.0	0.2636	1,505.0	0.2622	0.2540	0.2637	155
	BST7S3	3	7	A,B	0.254	162.50	2,433.0	0.2090	1,885.0	0.2079	0.2010	0.2086	-
	BST3S2	2	3	AA	0.320	202.90	2,912.0	0.1641	2,298.0	0.1633	0.1578	-	209
	BST7S2	2	7	A,B	0.284	204.90	3,050.0	0.1660	2,360.0	0.1650	0.1594	0.1657	209
	BST7S1	1	7	A,AA	0.328	258.40	3,801.0	0.1316	2,955.0	0.1309	0.1265	0.1302	-
	BST19S1	1	19	B**	0.316	258.40	3,902.0	0.1316	3,039.0	0.1309	0.1265	0.1313	-
	BST7S1/0	1/0	7	A,AA	0.368	325.80	4,752.0	0.1042	3,705.0	0.1037	0.1002	0.1031	282
	BST19S1/0	1/0	19	B**	0.357	325.80	4,897.0	0.1042	3,802.0	0.1037	0.1003	0.1043	282
	BST7S2/0	2/0	7	A,AA	0.414	410.90	5,927.0	0.0826	4,640.0	0.0822	0.0795	0.0818	329
	BST19S2/0	2/0	19	B**	0.402	410.90	6,153.0	0.0826	4,765.0	0.0822	0.0795	0.0826	329
	BST7S3/0	3/0	7	A,AA	0.464	518.10	7,36.0	0.0655	5,812.0	0.0652	0.0631	0.0649	382
	BST19S3/0	3/0	19	B**	0.450	518.10	7,702.0	0.0655	5,973.0	0.0652	0.0631	0.0655	382
	BST7S4/0	4/0	7	A,AA	0.522	653.30	9,154.0	0.0519	7,278.0	0.0517	0.0499	-	444
	BST19S4/0	4/0	19	B**	0.509	653.30	9,617.0	0.0519	7,479.0	0.0517	0.0500	0.0515	444
	BST61S4/0	4/0	61	D	0.530	653.30	9,903.0	0.0519	7,728.0	0.0517	0.0500	0.0520	444

*Per NEC Table 310.15 (B)(21). Based on conductor temperature of 80°C; ambient temperature of 40°C; 2 ft./sec. wind.
**Ref ASTM B-787 NOTE: The data shown is approximate and subject to standard industry tolerance

servicewire.com
Phoenix, AZ 877-623-9473
Culloden, WV 800-624-3572
Houston, TX 800-231-9473

RETURN to Table of Contents

ServiceWire Co.
Manufacturing quality. Delivering service.
Made in the USA
ISO 9001:2008

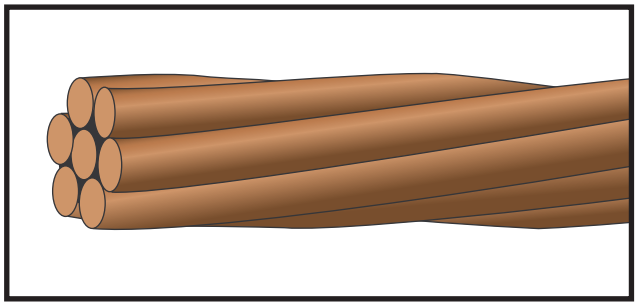

Bare Copper Stranded Conductor

Bare or Tinned, Soft (Annealed), Medium Hard, Hard Drawn

Application:
Suitable for use in electrical grounding systems (including counterpoise grounding) and on insulators for overhead transmission and distribution applications. Stranded conductors offer greater flexibility than solid.

Standards:
ASTM Standards:
- B-1 (hard drawn)
- B-2 (medium hard drawn)
- B-3 (soft or annealed)
- B-8 (concentric lay stranded)
- B-33 (tinned)

REA/RUS Approved
Federal Standard QQ-W-343
RoHS Compliant

STRANDED BARE COPPER

Part Number	Size Kcmil	Strand (no.)	Stranding Class	Nominal Diameter Overall (inch)	Approx. Net Weight (lb/1000')	Hard Drawn		Medium Hard Drawn		Soft Drawn		Ampacity*
						Min. Breaking Strength (lbs.)	DC Resistance (OHMS/1000') @ 20°C	Min. Breaking Strength (lbs.)	DC Resistance (OHMS/1000') @ 20°C	DC Resistance (OHMS/1000') @ 20°C		
										Bare	Tinned	
BST19S250	250	19	A	0.574	771.9	11,360	0.0440	8,836	0.0438	0.0423	0.0435	494
BST37S250	250	37	B	0.572	771.9	11,600	0.0440	8,952	0.0438	0.0423	0.0440	494
BST19S300	300	19	A	0.629	926.3	13,510	0.0366	10,530	0.0365	0.0352	0.0363	556
BST37S300	300	37	B	0.629	926.3	13,855	0.0366	10,732	0.0365	0.0353	0.0367	556
BST19S350	350	19	A	0.678	1,081.0	15,590	0.0314	12,200	0.0313	0.0302	0.0311	-
BST37S350	350	37	B	0.676	1,081.0	16,070	0.0314	12,462	0.0313	0.0302	0.0314	-
BST19S400	400	19	A,AA	0.726	1,235.0	17,810	0.0275	13,950	0.0273	0.0264	0.0272	-
BST37S400	400	37	B	0.721	1,235.0	18,331	0.0275	14,144	0.0273	0.0264	0.0272	-
BST19S500	500	19	AA	0.811	1,544.0	21,942	0.0220	17,313	0.0219	0.0212	0.0218	773
BST37S500	500	37	A,B	0.796	1,544.0	22,495	0.0220	17,517	0.0219	0.0212	0.0218	773
BST61S600	600	61	B	0.887	1,853.0	27,530	0.0183	21,350	0.0182	0.0176	0.0181	-
BST37S750	750	37	AA	0.997	2,316.0	33,411	0.0146	26,162	0.0146	0.0141	0.0145	1,000
BST61S750	750	61	A,B	0.985	2,316.0	34,090	0.0146	26,510	0.0146	0.0141	0.0145	1,000
BST37S1000	1000	37	AA	1.152	3,088.0	43,826	0.0110	34,396	0.0109	0.0106	0.0109	1,193
BST61S1000	1000	61	A,B	1.152	3,088.0	45,030	0.0110	35,100	0.0109	0.0106	0.0109	1,193

*Per NEC Table 310.15 (B)(21). Based on conductor temperature of 80°C; ambient temperature of 40°C; 2 ft./sec. wind.
NOTE: The data shown is approximate and subject to standard industry tolerances.

servicewire.com
Phoenix, AZ 877-623-9473
Culloden, WV 800-624-3572
Houston, TX 800-231-9473

ServiceWire Co.
Manufacturing quality. Delivering service.
Made in the USA
ISO 9001: 2008

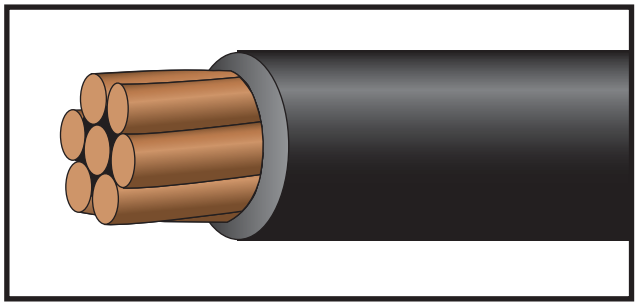

XHHW-2

CT Rated
600 Volt Copper

Description:
Single copper conductor, stranded and insulated with moisture, heat and flame resistant, chemically crosslinked polyethylene. **Available in colors.**

Application:
Suitable for general purpose wiring, for power distribution and branch circuit wiring where a cable having superior flame retardance is required. Suitable for use in 105ºC dry systems. Also suitable for use in low leakage circuits requiring a dielectric constant of 3.5 or less (Hospital Grade).

Standards:
ASTM Standards:
- B-3 (soft or annealed)
- B-8 (concentric lay stranded)
- B-787 (combination strand)

UL 44
C(UL)US RW90: CSA/UL Listed
ICEA S-95-658/NEMA WC-70
Federal Spec. A-A-59544
Flame Rated: CT Use (1/0 AWG and larger)
Temperature Rated at 90°C Wet/Dry
Cold Temperature Rated at -40ºC
Sunlight Resistant
Gasoline and Oil Resistant II
Appliance Wiring Material: Style 3578
RoHS Compliant

	Part Number	Size AWG or Kcmil	Strand (no.)	Insulation Thickness (mils)	Nominal Diameter Overall (inch)	Approx. Net Weight (lb/1000')	Ampacity* 90°C Wet/Dry
XLPE,XHHW-2, CT	XH14BK	14	7	30	0.133	18	35†
	XH12BK	12	7	30	0.152	27	40†
	XH10BK	10	7	30	0.175	39	55†
	XH8BK	8	7	45	0.233	64	80
	XH6BK	6	7	45	0.271	97	105
	XH4BK	4	7	45	0.320	149	140
	XH3BK	3	7	45	0.344	185	165
	XH2BK	2	7	45	0.374	230	190
	XH1BK	1	19	55	0.426	291	220
	XH1/0BK	1/0	19	55	0.467	366	260
	XH2/0BK	2/0	19	55	0.512	456	300
	XH3/0BK	3/0	19	55	0.560	569	350
	XH4/0BK	4/0	19	55	0.619	711	405
	XH250BK	250	37	65	0.702	835	455
	XH300BK	300	37	65	0.759	996	500
	XH350BK	350	37	65	0.806	1,155	570
	XH400BK	400	37	65	0.851	1,314	615
	XH500BK	500	37	65	0.926	1,631	700
	XH600BK	600	61	80	1.047	1,967	780
	XH750BK	750	61	80	1.145	2,441	885

*Per NEC Table 310.15 (B)(17).
†The overcurrent protection for items marked with an obelisk (†) shall not exceed 15 amps for #14 AWG, 20 amps for #12 AWG, and 30 amps for #10 AWG per NEC 310-17 footnote.
NOTE: The data shown is approximate and subject to standard industry tolerances.

servicewire.com
Phoenix, AZ 877-623-9473
Culloden, WV 800-624-3572
Houston, TX 800-231-9473

RETURN to Table of Contents

ServiceWire Co.
Manufacturing quality. Delivering service.
Made in the USA
ISO 9001:2008

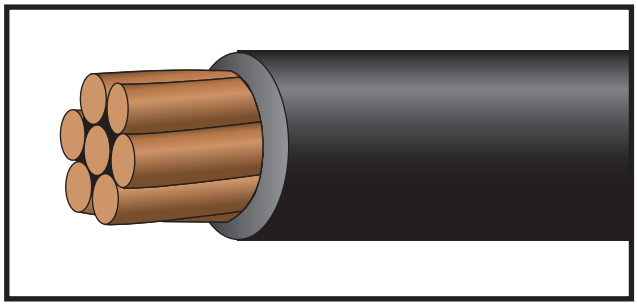

XHHW-2

VW-1, CT Rated 600 Volt Copper

Description:
Single copper conductor, stranded and insulated with moisture, heat and flame resistant, chemically crosslinked polyethylene. **Available in colors.**

Application:
Suitable for general purpose wiring, for power distribution and branch circuit wiring where a cable having superior flame retardance is required. Suitable for use in 105ºC dry systems. Also suitable for use in low leakage circuits requiring a dielectric constant of 3.5 or less (Hospital Grade).

Standards:
ASTM Standards:
- B-3 (soft or annealed)
- B-8 (concentric lay stranded)
- B787 (combination strand)

UL 44
C(UL)US RW90: CSA/UL Listed
ICEA S-95-658/NEMA WC-70
Federal Spec. A-A-59544
Flame Rated: CT Use/IEEE 1202 (1/0 AWG and larger)
FT-4 (1/0 AWG and larger)
Temperature Rated at 90°C Wet/Dry
Cold Temperature Rated at -40ºC
Sunlight Resistant (#6 AWG and larger)
Gasoline and Oil Resistant II
Appliance Wiring Material: Style 3578
RoHS Compliant

XLPE, XHHW-2, VW-1

Part Number	Size AWG or Kcmil	Strand (no.)	Insulation Thickness (mils)	Nominal Diameter Overall (inch)	Approx. Net Weight (lb/1000')	Ampacity* 90°C Wet/Dry
XHVW14BK	14	7	30	0.133	19	35†
XHVW12BK	12	7	30	0.152	28	40†
XHVW10BK	10	7	30	0.175	41	55†
XHVW8BK	8	7	45	0.233	66	80
XHVW6BK	6	7	45	0.271	102	105
XHVW4BK	4	7	45	0.320	155	140
XHVW3BK	3	7	45	0.344	185	165
XHVW2BK	2	7	45	0.374	238	190
XHVW1BK	1	19	55	0.426	301	220
XHVW1/0BK	1/0	19	55	0.467	374	260
XHVW2/0BK	2/0	19	55	0.512	465	300
XHVW3/0BK	3/0	19	55	0.560	579	350
XHVW4/0BK	4/0	19	55	0.619	723	405
XHVW250BK	250	37	65	0.702	850	455
XHVW300BK	300	37	65	0.759	997	500
XHVW350BK	350	37	65	0.806	1,173	570
XHVW400BK	400	37	65	0.851	1,314	615
XHVW500BK	500	37	65	0.926	1,651	700
XHVW600BK	600	61	80	1.047	1,972	780
XHVW750BK	750	61	80	1.145	2,444	885

*Per NEC Table 310.15 (B)(17).
†The overcurrent protection for items marked with an obelisk (†) shall not exceed 15 amps for #14 AWG, 20 amps for #12 AWG, and 30 amps for #10 AWG per NEC 310-17 footnote.
NOTE: The data shown is approximate and subject to standard industry tolerances.

servicewire.com
Phoenix, AZ 877-623-9473
Culloden, WV 800-624-3572
Houston, TX 800-231-9473

ServiceWire Co.
Manufacturing quality. Delivering service.
Made in the USA
ISO 9001: 2008

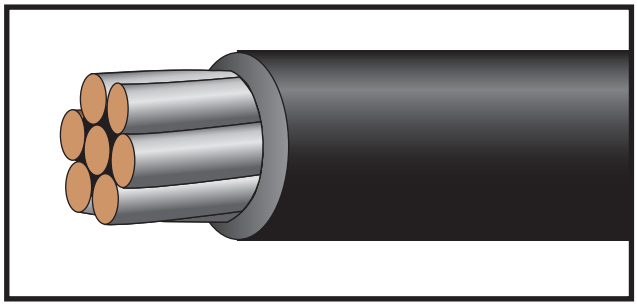

XHHW-2

VW-1, Tinned, CT Rated 600 Volt Copper

Description:
Single tinned copper conductor, stranded and insulated with moisture, heat and flame resistant, chemically crosslinked polyethylene. **Available in colors.**

Application:
Suitable for general purpose wiring, for power distribution and branch circuit wiring, where a cable having superior flame retardance is required. Suitable for use in 105º dry systems. Also suitable for use in low leakage circuits requiring a dielectric constant of 3.5 or less (Hospital Grade).

Standards:
ASTM Standards:
- B-3 (soft or annealed)
- B-8 (concentric lay stranded)
- B-33 (tinned)
- B787 (combination strand)

UL 44
C(UL) US RW90:CSA/UL Listed
ICEA S-95-658/NEMA WC-70
Federal Spec. A-A-59544
Flame Rated: CT Use/IEEE1202 (1/0 AWG and larger)
FT-4 (1/0 AWG and larger)
Temperature Rated at 90°C Wet/Dry
Cold Temperature Rated at -40°C
Sunlight Resistant (#6 AWG and larger)
Gasoline and Oil Resistant II
Appliance Wiring Material: Style 3578
RoHS Compliant

	Part Number	Size AWG or Kcmil	Strand (no.)	Insulation Thickness (mils)	Nominal Diameter Overall (inch)	Approx. Net Weight (lb/1000')	Ampacity* 90°C Wet/Dry
XLPE, XHHW-2, VW-1	XHVWT14BK	14	7	30	0.133	19	35†
	XHVWT12BK	12	7	30	0.152	28	40†
	XHVWT10BK	10	7	30	0.175	41	55†
	XHVWT8BK	8	7	45	0.233	66	80
	XHVWT6BK	6	7	45	0.271	102	105
	XHVWT4BK	4	7	45	0.320	155	140
	XHVWT3BK	3	7	45	0.344	185	165
	XHVWT2BK	2	7	45	0.374	238	190
	XHVWT1BK	1	19	55	0.426	301	220
	XHVWT1/0BK	1/0	19	55	0.467	374	260
	XHVWT2/0BK	2/0	19	55	0.512	465	300
	XHVWT3/0BK	3/0	19	55	0.560	579	350
	XHVWT4/0BK	4/0	19	55	0.619	723	405
	XHVWT250BK	250	37	65	0.702	850	455
	XHVWT300BK	300	37	65	0.759	997	500
	XHVWT350BK	350	37	65	0.806	1,173	570
	XHVWT400BK	400	37	65	0.851	1,314	615
	XHVWT500BK	500	37	65	0.926	1,651	700
	XHVWT600BK	600	61	80	1.047	1,972	780
	XHVWT750BK	750	61	80	1.145	2,444	885

*Per NEC Table 310.15 (B)(17).
†The overcurrent protection for items marked with an obelisk (†) shall not exceed 15 amps for #14 AWG, 20 amps for #12 AWG, and 30 amps for #10 AWG per NEC 310-17 footnote.
NOTE: The data shown is approximate and subject to standard industry tolerances.

servicewire.com
Phoenix, AZ 877-623-9473
Culloden, WV 800-624-3572
Houston, TX 800-231-9473

RETURN to Table of Contents

ServiceWire Co.
Manufacturing quality. Delivering service.
Made in the USA
ISO 9001:2008

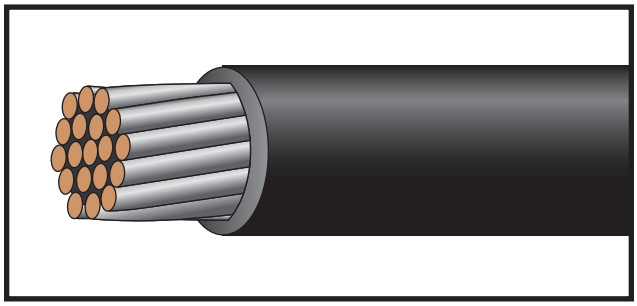

Switchboard Wire

SIS
600 Volt Copper

Description:
Single copper conductor, tinned, stranded and insulated with moisture and heat resistant, chemically crosslinked polyethylene.
Available in colors.

Application:
Suitable for use in 105ºC dry systems.

Standards:
UL 44
C(UL)US: CSA/UL Listed (#14 AWG and larger)
ICEA S-95-658/NEMA WC-70
Federal Spec. A-A-59544
Flame Rated: UL 1581
Vertical Flame (VW1: #14 and larger)
Dual Rated Type XHHW-2 (#14 and larger)
UL 66 Fixture Wire (#16 AWG)
Temperature Rated at 90ºC Wet/Dry
Cold Temperature Rated at -40ºC
Sunlight Resistant (#16 AWG and #6 AWG)
Gasoline and Oil Resistant II
RoHS Compliant

Flex-Strand Catalog Number	Size AWG	Stranding		Insulation Thickness (mils)	Nominal Diameter Overall (inch)	Approx. Net Weight (lb/1000')	Ampacity* (30ºC ambient) 90ºC Wet/Dry
		Flex-Strand (no.)	Class B (no.)				
SIST16	16***	26	7	30	0.121	12	8
SIST14VW	14	41	7	30	0.139	19	25**
SIST12VW	12	65	7	30	0.158	27	30**
SIST10VW	10	104	7	30	0.182	40	40**
SIST8VW	8	133	7	45	0.238	67	55
SIST6VW	6	133	7	45	0.274	100	75

*Per NEC Table 310.15 (B)(17).
The overcurrent protection for items marked "" shall not exceed 15 amps for #14 AWG, 20 amps for #12 AWG, and 30 amps for #10 AWG per NEC 310-16 footnote.
***#16 AWG is FFH-2.
NOTE: Copper Conductor available Non-Tinned.
NOTE: The data shown is approximate and subject to standard industry tolerances.

servicewire.com
Phoenix, AZ 877-623-9473
Culloden, WV 800-624-3572
Houston, TX 800-231-9473

ServiceWire Co.
Manufacturing quality. Delivering service.
Made in the USA
ISO 9001: 2008

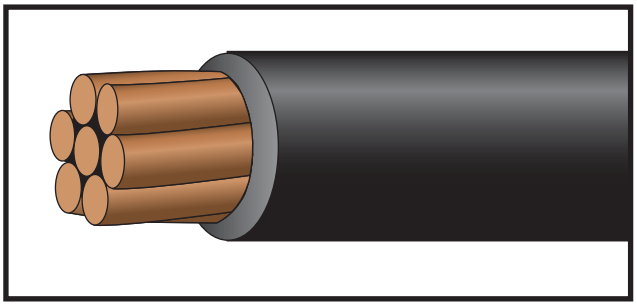

USE-2 or RHH/RHW-2

CT Rated
600/1,000 Volt Copper

Description:
Single copper conductor, stranded and insulated with moisture and heat resistant, chemically crosslinked polyethylene. **Available in colors.**

Application:
Suitable for use in general purpose wiring applications and may be installed in raceway, conduit, direct burial and aerial installations where a cable having superior flame retardance is required. Suitable for use in 105ºC dry systems. Also suitable for use in low leakage circuits requiring a dielectric constant of 3.5 or less (Hospital Grade).

Standards:
ASTM Standards:
- B-3 (soft or annealed)
- B-8 (concentric lay stranded)
- B787 (combination strand)

UL 44 and UL 854
C(UL)US RW90 1kV: CSA/UL Listed
C(UL) RPV90 600V
ICEA S-95-658/NEMA WC-70
L-824C (#12AWG - 4/0)
Federal Spec. A-A-59544
Flame Rated: CT Use (1/0 AWG and larger)
Temperature Rated at 90ºC Wet/Dry
Cold Temperature Rated at -40°C
Sunlight Resistant
Gasoline and Oil Resistant II
Direct Burial
RoHS Compliant

	Part Number	Size AWG or Kcmil	Strand (no.)	Insulation Thickness (mils)	Approx. Diameter Overall (inch)	Approx. Net Weight (lb/1000')	Ampacity* 90°C Wet/Dry
XLPE USE-2, RHH/RHW-2 CT	USE14BK	14	7	45	0.163	21	35†
	USE12BK	12	7	45	0.182	30	40†
	USE10BK	10	7	45	0.205	43	55†
	USE8BK	8	7	60	0.263	69	80
	USE6BK	6	7	60	0.301	103	105
	USE4BK	4	7	60	0.350	156	140
	USE3BK	3	7	60	0.374	192	165
	USE2BK	2	7	60	0.404	238	190
	USE1BK	1	19	80	0.476	307	220
	USE1/0BK	1/0	19	80	0.517	384	260
	USE2/0BK	2/0	19	80	0.562	476	300
	USE3/0BK	3/0	19	80	0.610	590	350
	USE4/0BK	4/0	19	80	0.669	735	405
	USE250BK	250	37	95	0.762	868	455
	USE300BK	300	37	95	0.819	1,031	500
	USE350BK	350	37	95	0.866	1,192	570
	USE400BK	400	37	95	0.911	1,353	615
	USE500BK	500	37	95	0.986	1,673	700
	USE600BK	600	61	110	1.111	2,033	780
	USE750BK	750	61	110	1.205	2,493	885

*Per NEC Table 310.15 (B)(17).
†The overcurrent protection for items marked with an obelisk (†) shall not exceed 15 amps for #14 AWG, 20 amps for #12 AWG, and 30 amps for #10 AWG per NEC 310-17 footnote.
NOTE: The data shown is approximate and subject to standard industry tolerances.

servicewire.com
Phoenix, AZ 877-623-9473
Culloden, WV 800-624-3572
Houston, TX 800-231-9473

RETURN to Table of Contents

ServiceWire Co.
Manufacturing quality. Delivering service.
Made in the USA
ISO 9001:2008

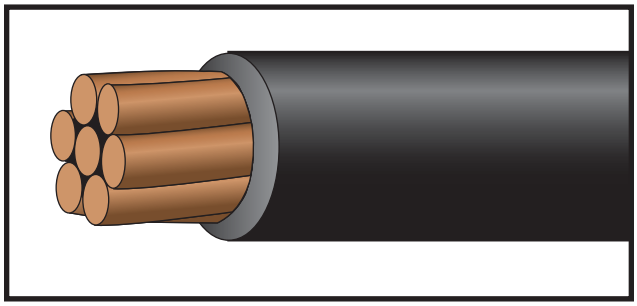

USE-2 or RHH/RHW-2

VW-1, CT Rated
600/1,000 Volt Copper

Description:
Single copper conductor, stranded and insulated with moisture and heat resistant, chemically crosslinked polyethylene. **Available in colors.**

Application:
Suitable for use in general purpose wiring applications and may be installed in raceway, conduit, direct burial and aerial installations where a cable having superior flame retardance is required. Suitable for use in 105ºC dry systems. Also suitable for use in low leakage circuits requiring a dielectric constant of 3.5 or less (Hospital Grade).

Standards:
ASTM Standards:
- B-3 (soft or annealed)
- B-8 (concentric lay stranded)
- B787 (combination strand)

UL 44 and UL 854
C(UL)US RW90 1kV: CSA/UL Listed
C(UL) RPV90 600V
ICEA S-95-658/NEMA WC-70
L-824C (#12AWG - 4/0)
Federal Spec. A-A-59544
Flame Rated: CT Use/IEEE 1202 (1/0 AWG and larger)
FT-4 (1/0 AWG and larger)
Temperature Rated at 90ºC Wet/Dry
Cold Temperature Rated at -40°C
Sunlight Resistant (#6 AWG and larger)
Gasoline and Oil Resistant II
Direct Burial
RoHS Compliant

	Part Number	Size AWG or Kcmil	Strand (no.)	Insulation Thickness (mils)	Approx. Diameter Overall (inch)	Approx. Net Weight (lb/1000')	Ampacity* 90°C Wet/Dry
XLPE USE-2, RHH/RHW-2, VW-1	USEVW14BK	14	7	45	0.163	23	35†
	USEVW12BK	12	7	45	0.182	32	40†
	USEVW10BK	10	7	45	0.205	46	55†
	USEVW8BK	8	7	60	0.263	73	80
	USEVW6BK	6	7	60	0.301	110	105
	USEVW4BK	4	7	60	0.350	164	140
	USEVW3BK	3	7	60	0.374	201	165
	USEVW2BK	2	7	60	0.404	248	190
	USEVW1BK	1	19	80	0.476	321	220
	USEVW1/0BK	1/0	19	80	0.517	395	260
	USEVW2/0BK	2/0	19	80	0.562	489	300
	USEVW3/0BK	3/0	19	80	0.610	605	350
	USEVW4/0BK	4/0	19	80	0.669	752	405
	USEVW250BK	250	37	95	0.762	902	455
	USEVW300BK	300	37	95	0.819	1,067	500
	USEVW350BK	350	37	95	0.866	1,217	570
	USEVW400BK	400	37	95	0.911	1,391	615
	USEVW500BK	500	37	95	0.986	1,702	700
	USEVW600BK	600	61	110	1.107	2,073	780
	USEVW750BK	750	61	110	1.205	2,554	885

*Per NEC Table 310.15 (B)(17).
†The overcurrent protection for items marked with an obelisk (†) shall not exceed 15 amps for #14 AWG, 20 amps for #12 AWG, and 30 amps for #10 AWG per NEC 310-17 footnote.
NOTE: The data shown is approximate and subject to standard industry tolerances.

servicewire.com
Phoenix, AZ 877-623-9473
Culloden, WV 800-624-3572
Houston, TX 800-231-9473

ServiceWire Co.
Manufacturing quality. Delivering service.
Made in the USA
ISO 9001: 2008

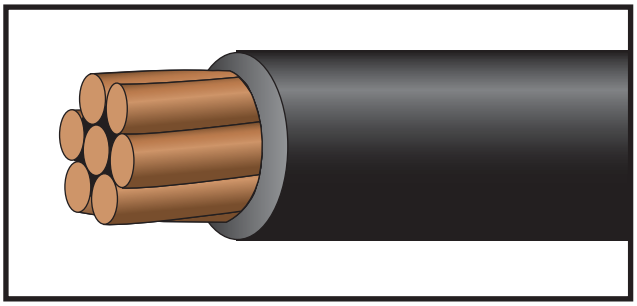

RHH/RHW-2 or USE-2

CT Rated
2,000 Volt Copper
PV 1,000/2,000 Volt Copper

Description:
Single copper conductor, stranded and insulated with moisture and heat resistant crosslinked polyethylene.

Application:
Suitable for wiring in raceways, conduit, etc. Applications include general purpose wiring for power distribution, services, feeders, branch circuit wiring in residential, industrial, and commercial buildings and in photovoltaic systems. Suitable for use in 105ºC dry systems. Also suitable for use in low leakage circuits requiring a dielectric constant of 3.5 or less (Hospital Grade).

Standards:
ASTM Standards:
- B-3 (soft or annealed)
- B-8 (concentric lay stranded)
- B787 (combination strand)

UL 44 RHW-2 2kV and UL 4703 (type PV 6AWG and larger)
C(UL)US RWU90 1kV: CSA/UL Listed
C(UL) RPVU90 1kV PV Systems
ICEA S-95-658/NEMA WC-70
Federal Spec. A-A-59544
Flame Rated: CT Use (1/0 AWG and larger)
Temperature Rated at 90ºC Wet/Dry
Cold Temperature Rated at -40ºC
Sunlight Resistant
Gasoline and Oil Resistant II
Direct Burial: 1kV
RoHS Compliant

	Part Number	Size AWG or Kcmil	Strand (no.)	Insulation Thickness (mils)	Nominal Diameter Overall (inch)	Approx. Net Weight (lb/1000')	Ampacity* 90°C Wet/Dry
XLPE/ 2KV RHH / RHW-2/RWU90	RWU14BK	14	7	60	0.19	25	35†
	RWU12BK	12	7	60	0.21	35	40†
	RWU10BK	10	7	60	0.24	48	55†
	RWU8BK	8	7	80	0.30	77	80
	RWU6BK	6	7	85	0.35	117	105
	RWU4BK	4	7	85	0.40	172	140
	RWU3BK	3	7	85	0.42	209	165
	RWU2BK	2	7	85	0.45	257	190
	RWU1BK	1	19	105	0.53	329	220
	RWU1/0BK	1/0	19	105	0.57	404	260
	RWU2/0BK	2/0	19	105	0.61	498	300
	RWU3/0BK	3/0	19	105	0.66	615	350
	RWU4/0BK	4/0	19	105	0.72	762	405
	RWU250BK	250	37	120	0.81	898	455
	RWU300BK	300	37	120	0.87	1,062	500
	RWU350BK	350	37	120	0.92	1,226	570
	RWU400BK	400	37	120	0.96	1,387	615
	RWU500BK	500	37	120	1.04	1,712	700
	RWU600BK	600	61	135	1.16	2,056	780
	RWU750BK	750	61	135	1.26	2,540	885

*Based on ambient temperature of 30°C per NEC Table 310.15 (B)(17).
†The overcurrent protection for items marked with an obelisk (†) shall not exceed 15 amps for #14 AWG, 20 amps for #12 AWG, and 30 amps for #10 AWG per NEC 310-17 footnote.
NOTE: The data shown is approximate and subject to standard industry tolerances.

servicewire.com
Phoenix, AZ 877-623-9473
Culloden, WV 800-624-3572
Houston, TX 800-231-9473

RETURN to Table of Contents

ServiceWire Co.
Manufacturing quality. Delivering service.
Made in the USA
ISO 9001:2008

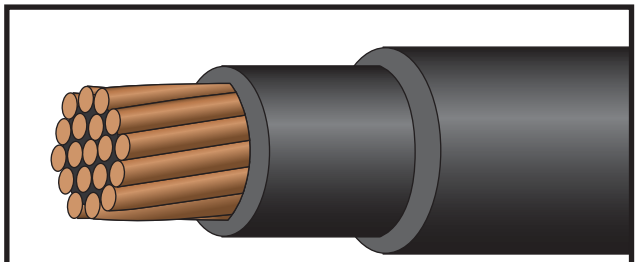

Available with tinned conductors

XHHW-2/PVC

600 Volt Copper

Description:

Single copper conductor, stranded, insulated with moisture and heat resistant, chemically crosslinked polyethylene (type XHHW-2) and covered with a sunlight resistant, PVC jacket. **Jacket available in colors.**

Standards:

UL 44
ICEA S-95-658/NEMA WC-70
Federal Spec. A-A-59544
Flame Rated: CT Use (1/0 AWG and larger)
Temperature Rated at 90°C Wet/Dry
Sunlight Resistant
RoHS Compliant

Part Number	Size AWG or Kcmil	Strand (no.)	Insulation Thickness (mils)	Jacket Thickness (mils)	Nominal Diameter Overall (inch)	Approx. Net Weight (lb/1000')	Ampacity* (30°C ambient) 90°C Wet/Dry
XHPVC14	14	7	30	30	0.19	27	25†
XHPVC12	12	7	30	30	0.21	37	30†
XHPVC10	10	7	30	30	0.24	51	40†
XHPVC8	8	7	45	30	0.29	79	55
XHPVC6	6	7	45	30	0.33	114	75
XHPVC4	4	7	45	30	0.38	169	95
XHPVC3	3	7	45	30	0.40	206	115
XHPVC2	2	7	45	30	0.43	253	130
XHPVC1	1	19	55	45	0.52	331	145
XHPVC1/0	1/0	19	55	45	0.56	409	170
XHPVC2/0	2/0	19	55	45	0.60	503	195
XHPVC3/0	3/0	19	55	45	0.65	620	225
XHPVC4/0	4/0	19	55	45	0.71	767	260
XHPVC250	250	37	65	65	0.83	929	290
XHPVC300	300	37	65	65	0.89	1,096	320
XHPVC350	350	37	65	65	0.94	1,262	350
XHPVC400	400	37	65	65	0.98	1,426	380
XHPVC500	500	37	65	65	1.06	1,752	430
XHPVC600	600	61	80	65	1.18	2,103	475
XHPVC750	750	61	80	65	1.28	2,589	535

*Per NEC Table 310.15 (B)(16).
†The overcurrent protection for items marked with an obelisk (†) shall not exceed 15 amps for #14 AWG, 20 amps for #12 AWG and 30 amps for #10 AWG per NEC 310-17 footnote.
NOTE: The data shown is approximate and subject to standard industry tolerances.

servicewire.com
Phoenix, AZ 877-623-9473
Culloden, WV 800-624-3572
Houston, TX 800-231-9473

ServiceWire Co.
Manufacturing quality. Delivering service.
Made in the USA
ISO 9001: 2008

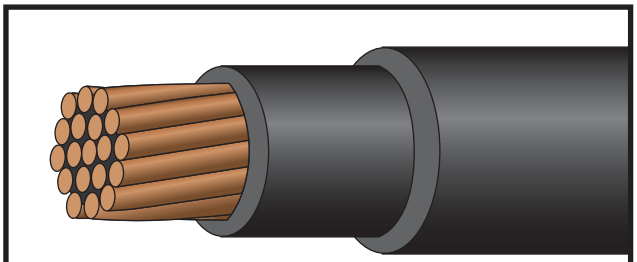

Available with tinned conductors

XHHW-2/ServiceCPE®

600 Volt Copper

Description:
Single copper conductor, stranded, insulated with moisture and heat resistant, chemically crosslinked polyethylene (type XHHW-2) and covered with a sunlight resistant, CPE jacket.

Standards:
UL 44
ICEA S-95-658/NEMA WC-70
Federal Spec. A-A-59544
Flame Rated: CT Use (1/0 AWG and larger)
Temperature Rated at 90°C Wet/Dry
Sunlight Resistant
RoHS Compliant

Part Number	Size AWG or Kcmil	Strand (no.)	Insulation Thickness (mils)	Jacket Thickness (mils)	Nominal Diameter Overall (inch)	Approx. Net Weight (lb/1000')	Ampacity* (30°C ambient) 90°C Wet/Dry
XHCPE14	14	7	30	30	0.19	27	25†
XHCPE12	12	7	30	30	0.21	37	30†
XHCPE10	10	7	30	30	0.24	51	40†
XHCPE8	8	7	45	30	0.29	79	55
XHCPE6	6	7	45	30	0.33	115	75
XHCPE4	4	7	45	30	0.38	169	95
XHCPE3	3	7	45	30	0.40	206	115
XHCPE2	2	7	45	30	0.43	253	130
XHCPE1	1	19	55	45	0.52	332	145
XHCPE1/0	1/0	19	55	45	0.56	409	170
XHCPE2/0	2/0	19	55	45	0.60	504	195
XHCPE3/0	3/0	19	55	45	0.65	621	225
XHCPE4/0	4/0	19	55	45	0.71	768	260
XHCPE250	250	37	65	65	0.83	930	290
XHCPE300	300	37	65	65	0.89	1,098	320
XHCPE350	350	37	65	65	0.94	1,263	350
XHCPE400	400	37	65	65	0.98	1,428	380
XHCPE500	500	37	65	65	1.06	1,754	430
XHCPE600	600	61	80	65	1.18	2,105	475
XHCPE750	750	61	80	65	1.28	2,591	535

*Per NEC Table 310.15 (B)(16).
†The overcurrent protection for items marked with an obelisk (†) shall not exceed 15 amps for #14 AWG, 20 amps for #12 AWG and 30 amps for #10 AWG per NEC 310-17 footnote.
NOTE: The data shown is approximate and subject to standard industry tolerances.

servicewire.com
Phoenix, AZ 877-623-9473
Culloden, WV 800-624-3572
Houston, TX 800-231-9473

RETURN to Table of Contents

ServiceWire Co.
Manufacturing quality. Delivering service.
Made in the USA
ISO 9001:2008

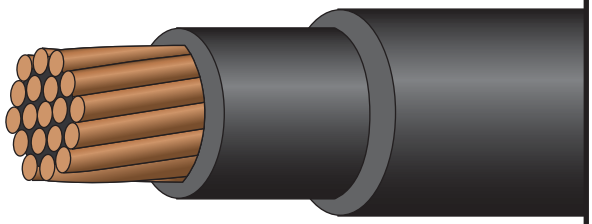

Available with tinned conductors

XHHW-2/EnviroPlus®

Zero Halogen, Limited Smoke Jacket 600 Volt Copper

Description:

Single copper conductor, stranded, insulated with heat and moisture resistant, crosslinked polyethylene (type XHHW-2), with an overall flame and sunlight resistant, zero halogen, limited smoke, zero lead jacket. **Jacket available in colors.**

Standards:

UL44
ICEA S-95-658/NEMA WC-70
Federal Spec. A-A-59544
Flame Rated: LS and CT Rated (1/0 AWG and larger)
Temperature Rated at 90°C Wet/Dry
Cold Temperature Rated at -40ºC
Sunlight Resistant
Zero Halogen, Limited Smoke Jacket
RoHS Compliant

Part Number	Size AWG or Kcmil	Strand (no.)	Insulation Thickness (mils)	Jacket Thickness (mils)	Nominal Diameter Overall (inch)	Approx. Net Weight (lb/1000')	Ampacity* (30°C ambient) 90°C Wet/Dry
XHENV14	14	7	30	30	0.19	28	25†
XHENV12	12	7	30	30	0.21	38	30†
XHENV10	10	7	30	30	0.24	52	40†
XHENV8	8	7	45	30	0.30	80	55
XHENV6	6	7	45	30	0.33	116	75
XHENV4	4	7	45	30	0.38	171	95
XHENV3	3	7	45	30	0.40	208	115
XHENV2	2	7	45	30	0.43	255	130
XHENV1	1	19	55	45	0.52	335	145
XHENV1/0	1/0	19	55	45	0.59	419	170
XHENV2/0	2/0	19	55	45	0.64	514	195
XHENV3/0	3/0	19	55	45	0.69	632	225
XHENV4/0	4/0	19	55	45	0.75	780	260
XHENV250	250	37	65	65	0.87	947	290
XHENV300	300	37	65	65	0.93	1,116	320
XHENV350	350	37	65	65	0.97	1,282	350
XHENV400	400	37	65	65	1.02	1,447	380
XHENV500	500	37	65	65	1.09	1,774	430
XHENV600	600	61	80	65	1.21	2,127	475
XHENV750	750	61	80	65	1.31	2,615	535

*Per NEC Table 310.15 (B)(16).
†The overcurrent protection for items marked with an obelisk (†) shall not exceed 15 amps for #14 AWG, 20 amps for #12 AWG and 30 amps for #10 AWG per NEC 310-17 footnote.
NOTE: The data shown is approximate and subject to standard industry tolerances.

servicewire.com
Phoenix, AZ 877-623-9473
Culloden, WV 800-624-3572
Houston, TX 800-231-9473

ServiceWire Co.
Manufacturing quality. Delivering service.
Made in the USA
ISO 9001: 2008

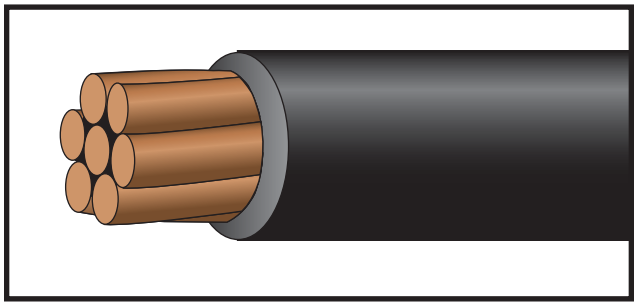

Photovoltaic Wire ServiceSolar®

(for use with Solar Panels)

USE-2 or RHH or RHW-2 600 Volt Copper

Description:
Single copper conductor, stranded and insulated with moisture and heat resistant crosslinked polyethylene. Rated 600V to meet the challenging requirements of transformerless inverters on photovoltaic (solar) panel installations. **Available in colors.**

Application:
Suitable for use as interconnection wiring on solar panels in grounded or ungrounded systems as defined in applicable parts of the National Electrical Code (NEC) NFPA 70, such as article 690.31(A). Suitable for use in 105ºC dry systems. Also suitable for use in low leakage circuits requiring a dielectric constant of 3.5 or less (Hospital Grade).

Standards:
ASTM Standards:
- B-3 (soft or annealed)
- B-8 (concentric lay stranded)
- B787 (combination strand)

UL 44, UL 854 and UL 4703
C(UL) RPVU90 1kV/2kV
ICEA S-95-658/NEMA WC-70
Federal Spec. A-A-59544
Flame Rated: Vertical Wire/FV1
CT Use (1/0 AWG and larger)
Temperature Rated at 90ºC Wet/Dry
Cold Temperature Rated at -40°C
Sunlight Resistant
Gasoline and Oil Resistant II
Direct Burial
RoHS Compliant

XLPE PV / 600 V RHH / RHW-2

Part Number	Size AWG or Kcmil	Strand (no.)	Insulation Thickness (mils)	Nominal Diameter Overall (inch)	Approx. Net Weight (lb/1000')	Ampacity* 90°C Wet/Dry
PV14BK	14	7	60	0.19	25	35 †
PV14BK-C	14	19	60	0.19	25	35 †
PV12BK	12	7	60	0.21	34	40 †
PV12BK-C	12	19	60	0.21	34	40 †
PV10BK	10	7	60	0.24	48	55 †
PV10BK-C	10	19	60	0.24	48	55 †
PV8BK	8	7	75	0.29	75	80
PV8BK-C	8	19	75	0.29	75	80
PV6BK	6	7	75	0.33	109	105
PV4BK	4	7	75	0.38	162	140
PV3BK	3	7	75	0.40	198	165
PV2BK	2	7	75	0.43	243	190
PV1BK	1	19	95	0.51	316	220
PV1/0BK	1/0	19	95	0.55	389	260
PV2/0BK	2/0	19	95	0.59	481	300
PV3/0BK	3/0	19	95	0.64	595	350
PV4/0BK	4/0	19	95	0.70	738	405
PV250BK	250	37	110	0.79	875	455
PV300BK	300	37	110	0.85	1,037	500
PV350BK	350	37	110	0.90	1,198	570
PV400BK	400	37	110	0.94	1,358	615
PV500BK	500	37	110	1.02	1,676	700
PV600BK	600	61	125	1.14	2,021	780
PV750BK	750	61	125	1.24	2,497	885

*Based on ambient temperature of 30°C per NEC Table 310.15 (B)(17).
†The overcurrent protection for items marked with an obelisk (†) shall not exceed 15 amps for #14 AWG, 20 amps for #12 AWG, and 30 amps for #10 AWG per NEC 310-17 footnote.
NOTE: The data shown is approximate and subject to standard industry tolerances.
NOTE: Photovoltaic module interconnection wire for use with or without a raceway in accordance with wiring systems Article 690 in the National Electrical Code (NEC), NFPA 70.

servicewire.com
Phoenix, AZ 877-623-9473
Culloden, WV 800-624-3572
Houston, TX 800-231-9473

RETURN to Table of Contents

ServiceWire Co.
Manufacturing quality. Delivering service.
Made in the USA
ISO 9001:2008

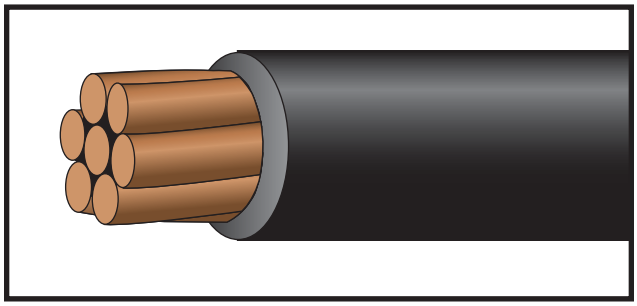

Photovoltaic Wire ServiceSolar®

(for use with Solar Panels)

VW-1, USE-2 or RHH or RHW-2 600 Volt Copper

Description:
Single copper conductor, stranded and insulated with moisture and heat resistant crosslinked polyethylene. Rated 600V to meet the challenging requirements of transformerless inverters on photovoltaic (solar) panel installations. **Available in colors.**

Application:
Suitable for use as interconnection wiring on solar panels in grounded or ungrounded systems as defined in applicable parts of the National Electrical Code (NEC) NFPA 70, such as article 690.31(A). Suitable for use in 105ºC dry systems. Also suitable for use in low leakage circuits requiring a dielectric constant of 3.5 or less (Hospital Grade).

Standards:
ASTM Standards:
- B-3 (soft or annealed)
- B-8 (concentric lay stranded)
- B787 (combination strand)

UL 44, UL 854 and UL 4703
C(UL) RPVU90 1kV/2kV
ICEA S-95-658/NEMA WC-70
Federal Spec. A-A-59544
Flame Rated: VW-1/FT1
CT Use (1/0 AWG and larger)
Temperature Rated at 90ºC Wet/Dry
Cold Temperature Rated at -40°C
Sunlight Resistant
Gasoline and Oil Resistant II
Direct Burial
RoHS Compliant

XLPE PV / 600 V RHH / RHW-2

Part Number	Size AWG or Kcmil	Strand (no.)	Insulation Thickness (mils)	Nominal Diameter Overall (inch)	Approx. Net Weight (lb/1000')	Ampacity* 90°C Wet/Dry
PV14VW	14	7	60	0.19	29	35 †
PV14VW-C	14	19	60	0.19	29	35 †
PV12VW	12	7	60	0.21	39	40 †
PV12VW-C	12	19	60	0.21	39	40 †
PV10VW	10	7	60	0.24	54	55 †
PV10VW-C	10	19	60	0.24	54	55 †
PV8VW	8	7	75	0.29	84	80
PV8VW-C	8	19	75	0.29	84	80
PV6VW	6	7	75	0.33	121	105
PV4VW	4	7	75	0.38	178	140
PV3VW	3	7	75	0.40	211	165
PV2VW	2	7	75	0.43	266	190
PV1VW	1	19	95	0.51	339	220
PV1/0VW	1/0	19	95	0.55	416	260
PV2/0VW	2/0	19	95	0.59	512	300
PV3/0VW	3/0	19	95	0.64	631	350
PV4/0VW	4/0	19	95	0.70	782	405
PV250VW	250	37	110	0.79	919	455
PV300VW	300	37	110	0.85	1,081	500
PV350VW	350	37	110	0.90	1,254	570
PV400VW	400	37	110	0.94	1,417	615
PV500VW	500	37	110	1.02	1,747	700
PV600VW	600	61	125	1.14	2,112	780
PV750VW	750	61	125	1.24	2,597	885

*Based on ambient temperature of 30°C per NEC Table 310.15 (B)(17).
†The overcurrent protection for items marked with an obelisk (†) shall not exceed 15 amps for #14 AWG, 20 amps for #12 AWG, and 30 amps for #10 AWG per NEC 310-17 footnote.
NOTE: The data shown is approximate and subject to standard industry tolerances.
NOTE: Photovoltaic module interconnection wire for use with or without a raceway in accordance with wiring systems Article 690 in the National Electrical Code (NEC), NFPA 70.

servicewire.com
Phoenix, AZ 877-623-9473
Culloden, WV 800-624-3572
Houston, TX 800-231-9473

ServiceWire Co.
Manufacturing quality. Delivering service.
Made in the USA
ISO 9001: 2008

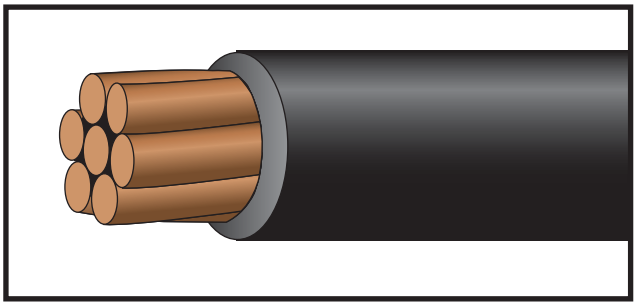

Photovoltaic Wire ServiceSolar®

(for use with Solar Panels)

USE-2 or RHH or RHW-2
1,000/2,000 Volt Copper

Description:
Single copper conductor, stranded and insulated with moisture and heat resistant crosslinked polyethylene. Rated 2KV to meet the challenging requirements of transformerless inverters on photovoltaic (solar) panel installations. **Available in colors.**

Application:
Suitable for use as interconnection wiring on solar panels in grounded or ungrounded systems as defined in applicable parts of the National Electrical Code (NEC) NFPA 70, such as article 690.31(A). Suitable for use in 105ºC dry systems. Also suitable for use in low leakage circuits requiring a dielectric constant of 3.5 or less (Hospital Grade).

Standards:
ASTM Standards:
- B-3 (soft or annealed)
- B-8 (concentric lay stranded)
- B787 (combination strand)

UL 44, UL 854 and UL 4703
C(UL) RPVU90 1kV/2kV
ICEA S-95-658/NEMA WC-70
Federal Spec. A-A-59544
Flame Rated: Vertical Wire/FV1
CT Use (1/0 AWG and larger)
Temperature Rated at 90ºC Wet/Dry
Cold Temperature Rated at -40°C
Sunlight Resistant
Gasoline and Oil Resistant II
Direct Burial
RoHS Compliant

XLPE PV / 1KV / 2KV RHH / RHW-2

Part Number	Size AWG or Kcmil	Strand (no.)	Insulation Thickness (mils)	Nominal Diameter Overall (inch)	Approx. Net Weight (lb/1000')	Ampacity* 90°C Wet/Dry
PV2K14BK	14	7	75	0.22	29	35 †
PV2K14BK-C	14	19	75	0.22	29	35 †
PV2K12BK	12	7	75	0.24	39	40 †
PV2K12BK-C	12	19	75	0.24	39	40 †
PV2K10BK	10	7	75	0.27	53	55 †
PV2K10BK-C	10	19	75	0.27	53	55 †
PV2K8BK	8	7	85	0.31	79	80
PV2K8BK-C	8	19	85	0.31	79	80
PV2K6BK	6	7	85	0.35	114	105
PV2K4BK	4	7	85	0.40	167	140
PV2K3BK	3	7	85	0.42	204	165
PV2K2BK	2	7	85	0.45	249	190
PV2K1BK	1	19	105	0.53	324	220
PV2K1/0BK	1/0	19	105	0.57	398	260
PV2K2/0BK	2/0	19	105	0.61	490	300
PV2K3/0BK	3/0	19	105	0.66	604	350
PV2K4/0BK	4/0	19	105	0.72	749	405
PV2K250BK	250	37	120	0.81	887	455
PV2K300BK	300	37	120	0.87	1,050	500
PV2K350BK	350	37	120	0.92	1,211	570
PV2K400BK	400	37	120	0.96	1,372	615
PV2K500BK	500	37	120	1.04	1,691	700
PV2K600BK	600	61	135	1.16	2,038	780
PV2K750BK	750	61	135	1.26	2,516	885

*Based on ambient temperature of 30°C per NEC Table 310.15 (B)(17).
†The overcurrent protection for items marked with an obelisk (†) shall not exceed 15 amps for #14 AWG, 20 amps for #12 AWG, and 30 amps for #10 AWG per NEC 310-17 footnote.
NOTE: The data shown is approximate and subject to standard industry tolerances.
NOTE: Photovoltaic module interconnection wire for use with or without a raceway in accordance with wiring systems Article 690 in the National Electrical Code (NEC), NFPA 70.

servicewire.com
Phoenix, AZ 877-623-9473
Culloden, WV 800-624-3572
Houston, TX 800-231-9473

RETURN to Table of Contents

ServiceWire Co.
Manufacturing quality. Delivering service.
Made in the USA
ISO 9001:2008

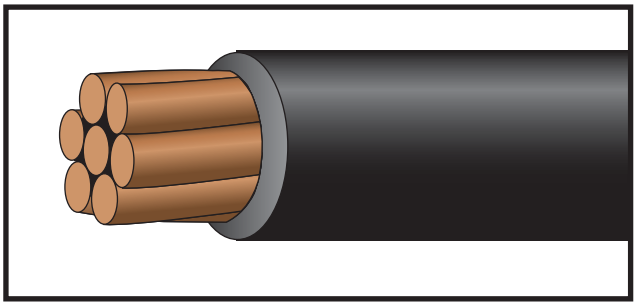

Photovoltaic Wire ServiceSolar®

(for use with Solar Panels)

VW-1, USE-2 or RHH or RHW-2 1,000/2,000 Volt Copper

Description:
Single copper conductor, stranded and insulated with moisture and heat resistant crosslinked polyethylene. Rated 2KV to meet the challenging requirements of transformerless inverters on photovoltaic (solar) panel installations. **Available in colors.**

Application:
Suitable for use as interconnection wiring on solar panels in grounded or ungrounded systems as defined in applicable parts of the National Electrical Code (NEC) NFPA 70, such as article 690.31(A). Suitable for use in 105ºC dry systems. Also suitable for use in low leakage circuits requiring a dielectric constant of 3.5 or less (Hospital Grade).

Standards:
ASTM Standards:
- B-3 (soft or annealed)
- B-8 (concentric lay stranded)
- B787 (combination strand)

UL 44, UL 854 and UL 4703
C(UL) RPVU90 1kV/2kV
ICEA S-95-658/NEMA WC-70
Federal Spec. A-A-59544
Flame Rated: VW-1/FT1
CT Use (1/0 AWG and larger)
Temperature Rated at 90ºC Wet/Dry
Cold Temperature Rated at -40°C
Sunlight Resistant
Gasoline and Oil Resistant II
Direct Burial
RoHS Compliant

XLPE PV / 1KV / 2KV RHH / RHW-2

Part Number	Size AWG or Kcmil	Strand (no.)	Insulation Thickness (mils)	Nominal Diameter Overall (inch)	Approx. Net Weight (lb/1000')	Ampacity* 90°C Wet/Dry
PV2K14VW	14	7	75	0.22	35	35 †
PV2K14VW-C	14	19	75	0.22	35	35 †
PV2K12VW	12	7	75	0.24	46	40 †
PV2K12VW -C	12	19	75	0.24	46	40 †
PV2K10VW	10	7	75	0.27	62	55 †
PV2K10VW-C	10	19	75	0.27	62	55 †
PV2K8VW	8	7	85	0.31	90	80
PV2K8VW-C	8	19	85	0.31	90	80
PV2K6VW	6	7	85	0.35	128	105
PV2K4VW	4	7	85	0.40	187	140
PV2K3VW	3	7	85	0.42	226	165
PV2K2VW	2	7	85	0.45	276	190
PV2K1VW	1	19	105	0.53	349	220
PV2K1/0VW	1/0	19	105	0.57	427	260
PV2K2/0VW	2/0	19	105	0.61	525	300
PV2K3/0VW	3/0	19	105	0.66	646	350
PV2K4/0VW	4/0	19	105	0.72	798	405
PV2K250VW	250	37	120	0.81	935	455
PV2K300VW	300	37	120	0.87	1,105	500
PV2K350VW	350	37	120	0.92	1,273	570
PV2K400VW	400	37	120	0.96	1,439	615
PV2K500VW	500	37	120	1.04	1,769	700
PV2K600VW	600	61	135	1.16	2,118	780
PV2K750VW	750	61	135	1.26	2,609	885

*Based on ambient temperature of 30°C per NEC Table 310.15 (B)(17).
†The overcurrent protection for items marked with an obelisk (†) shall not exceed 15 amps for #14 AWG, 20 amps for #12 AWG, and 30 amps for #10 AWG per NEC 310-17 footnote.
NOTE: The data shown is approximate and subject to standard industry tolerances.
NOTE: Photovoltaic module interconnection wire for use with or without a raceway in accordance with wiring systems Article 690 in the National Electrical Code (NEC), NFPA 70.

servicewire.com
Phoenix, AZ 877-623-9473
Culloden, WV 800-624-3572
Houston, TX 800-231-9473

ServiceWire Co.
Manufacturing quality. Delivering service.
Made in the USA
ISO 9001: 2008

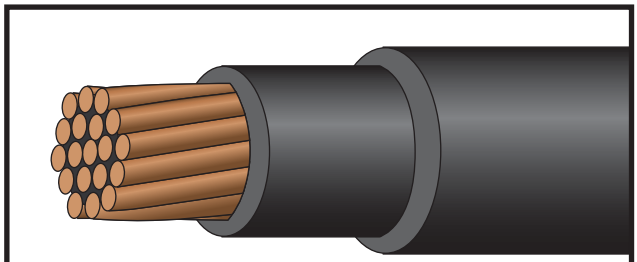

Available with tinned conductors

EnviroPlus® Photovoltaic Wire ServiceSolar®

(for use with Solar Panels)

USE-2 or RHH or RHW-2, Zero Halogen, Limited Smoke Jacket

600 Volt Copper

Description:
Single conductor insulated with heat and moisture resistant, crosslinked polyethylene insulation (type RHW-2), with an overall flame and sunlight resistant, zero halogen, limited smoke, zero lead jacket.

Application:
Suitable for use as interconnection wiring on solar panels in grounded or ungrounded systems as defined in applicable parts of the National Electrical Code (NEC) NFPA 70, such as article 690.31(A).

Standards:
UL 4703 and UL854 (#16 per UL 66)
C(UL) RPV90 600V
ICEA S-95-658/NEMA WC-70
Flame Rated: VW-1/FT1
CT Use (1/0 AWG and larger)
Sunlight, Water, Crush and Abrasion Resistant
Temperature Rated at 90°C Wet/Dry
Cold Temperature Rated at -40°C
Direct Burial
Zero Halogen, Limited Smoke Jacket
RoHS Compliant

Part Number	Size AWG or Kcmil	Strand (no.)	Insulation Thickness (mils)	Jacket Thickness (mils)	Nominal Diameter Overall (inch)	Approx. Net Weight (lb/1000')	Ampacity* (30°C ambient) 90°C Wet/Dry
PVENV16	16	26	45	30	0.21	26	8
PVENV14	14	7	45	30	0.22	33	25
PVENV12	12	7	45	30	0.24	43	30†
PVENV10	10	7	45	30	0.27	58	40†
PVENV8	8	7	60	30	0.32	87	55
PVENV6	6	7	60	45	0.39	135	75
PVENV4	4	7	60	45	0.44	192	95
PVENV3	3	7	60	45	0.46	231	115
PVENV2	2	7	60	45	0.49	279	130
PVENV1	1	19	80	60	0.60	373	145
PVENV1/0	1/0	19	80	60	0.64	454	170
PVENV2/0	2/0	19	80	60	0.68	552	195
PVENV3/0	3/0	19	80	60	0.73	673	225
PVENV4/0	4/0	19	80	60	0.79	824	260
PVENV250	250	37	95	80	0.92	1,005	290
PVENV300	300	37	95	80	0.98	1,178	320
PVENV350	350	37	95	80	1.03	1,347	350
PVENV400	400	37	95	80	1.07	1,515	380
PVENV500	500	37	95	80	1.15	1,847	430
PVENV600	600	61	110	80	1.27	2,228	475
PVENV750	750	61	110	80	1.37	2,703	535

*Per NEC Table 310.15 (B)(16).
†The overcurrent protection for items marked with an obelisk (†) shall not exceed 15 amps for #14 AWG, 20 amps for #12 AWG and 30 amps for #10 AWG per NEC 310-17 footnote.
NOTE: The data shown is approximate and subject to standard industry tolerances.

servicewire.com
Phoenix, AZ 877-623-9473
Culloden, WV 800-624-3572
Houston, TX 800-231-9473

RETURN to Table of Contents

ServiceWire Co.
Manufacturing quality. Delivering service.
Made in the USA
ISO 9001:2008

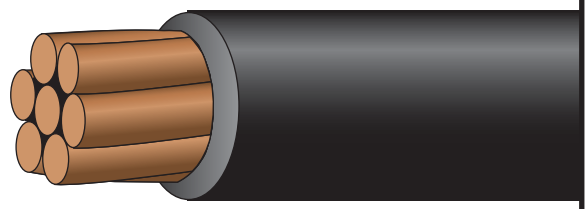

Available with tinned conductors

THW

600 Volt Copper

Description:
Single copper conductor, stranded, insulated with moisture and flame retardant, sunlight resistant PVC. **Available in colors.**

Application:
Suitable for use in conduit or other recognized raceways for services, feeders and branch circuit wiring. Applications include general purpose grounding for power and distribution circuits in residential, industrial and commercial buildings.

Standards:
ASTM Standards:
- B-3 (soft or annealed)
- B-8 (concentric lay stranded)
- B787 (combination strand)

UL 83
C(UL)US TW75: CSA/UL Listed (#14 - 500)
ICEA S-95-658/NEMA WC-70
Federal Spec. A-A-59544
Flame Rated: VW-1/FT1
CT Use (1/0 AWG and larger)
Temperature Rated at 75ºC Wet/Dry
Sunlight Resistant
Oil Resistant I
RoHS Compliant

Part Number	Size AWG or Kcmil	Strand (no.)	Insulation Thickness (mils)	Nominal Diameter Overall (inch)	Approx. Net Weight (lb/1000')	Ampacity* 75°C Wet/Dry
TH14SOLBK	14**	1	45	0.15	22	30†
TH12SOLBK	12**	1	45	0.17	31	35†
TH10SOLBK	10**	1	45	0.19	44	50†
TH8SOLBK	8	1	45	0.22	65	70
TH14BK	14	7	30	0.13	19	30†
TH12BK	12	7	30	0.15	28	35†
TH10BK	10	7	30	0.18	41	50†
TH8BK	8	7	45	0.23	68	70
TH6BK	6	7	60	0.30	111	95
TH4BK	4	7	60	0.35	166	125
TH3BK	3	7	60	0.37	204	145
TH2BK	2	7	60	0.40	251	170
TH1BK	1	19	80	0.48	324	195
TH1/0BK	1/0	19	80	0.52	402	230
TH2/0BK	2/0	19	80	0.56	493	265
TH3/0BK	3/0	19	80	0.61	610	310
TH4/0BK	4/0	19	80	0.67	758	360
TH250BK	250	37	95	0.76	896	405
TH300BK	300	37	95	0.82	1,062	445
TH350BK	350	37	95	0.87	1,226	505
TH400BK	400	37	95	0.91	1,389	545
TH500BK	500	37	95	0.99	1,713	620
TH600BK	600	61	110	1.11	2,067	690
TH750BK	750	61	110	1.21	2,548	785
TH1000BK	1,000	61	110	1.37	3,357	935

*Based on ambient temperature of 30°C per NEC Table 310.15 (B)(17). **Available with 30 mil Insulation.
†The overcurrent protection for items marked with an obelisk (†) shall not exceed 15 amps for #14 AWG, 20 amps for #12 AWG, and 30 amps for #10 AWG per NEC 310-17 footnote.
NOTE: The data shown is approximate and subject to standard industry tolerances.

servicewire.com
Phoenix, AZ 877-623-9473
Culloden, WV 800-624-3572
Houston, TX 800-231-9473

ServiceWire Co.
Manufacturing quality. Delivering service.
Made in the USA
ISO 9001: 2008

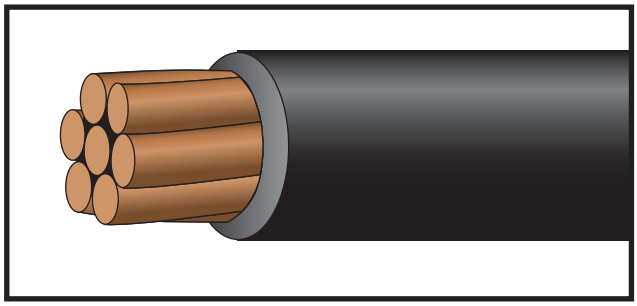

THW-2

600 Volt Copper

Description:
Single copper conductor, stranded, insulated with moisture and flame retardant, sunlight resistant PVC. **Available in colors.**

Application:
Suitable for use in conduit or other recognized raceways for services, feeders and branch circuit wiring. Applications include general purpose grounding for power and distribution circuits in residential, industrial and commercial buildings.

Standards:
ASTM Standards:
- B-3 (soft or annealed)
- B-8 (concentric lay stranded)
- B787 (combination strand)

UL 83
ICEA S-95-658/NEMA WC-70
Federal Spec. A-A-59544
Flame Rated: VW-1/FT1
CT Use (1/0 AWG and larger)
Temperature Rated at 90ºC Wet/Dry
Sunlight Resistant
Oil Resistant II
RoHS Compliant

Part Number	Size AWG or Kcmil	Strand (no.)	Insulation Thickness (mils)	Nominal Diameter Overall (inch)	Approx. Net Weight (lb/1000')	Ampacity* 90°C Wet/Dry
THW14BK	14	7	30	0.13	19	35†
THW12BK	12	7	30	0.15	28	40†
THW10BK	10	7	30	0.18	41	55†
THW8BK	8	7	45	0.23	68	80
THW6BK	6	7	60	0.30	111	105
THW4BK	4	7	60	0.35	166	140
THW3BK	3	7	60	0.37	204	165
THW2BK	2	7	60	0.40	251	190
THW1BK	1	19	80	0.48	324	220
THW1/0BK	1/0	19	80	0.52	402	260
THW2/0BK	2/0	19	80	0.56	493	300
THW3/0BK	3/0	19	80	0.61	610	350
THW4/0BK	4/0	19	80	0.67	758	405
THW250BK	250	37	95	0.76	896	455
THW300BK	300	37	95	0.82	1,062	500
THW350BK	350	37	95	0.87	1,226	570
THW400BK	400	37	95	0.91	1,389	615
THW500BK	500	37	95	0.99	1,713	700
THW600BK	600	61	110	1.11	2,067	780
THW750BK	750	61	110	1.21	2,548	885
THW1000BK	1,000	61	110	1.37	3,357	1,055

*Based on ambient temperature of 30°C per NEC Table 310.15 (B)(17).
†The overcurrent protection for items marked with an obelisk (†) shall not exceed 15 amps for #14 AWG, 20 amps for #12 AWG, and 30 amps for #10 AWG per NEC 310-17 footnote.
NOTE: The data shown is approximate and subject to standard industry tolerances.

servicewire.com
Phoenix, AZ 877-623-9473
Culloden, WV 800-624-3572
Houston, TX 800-231-9473

RETURN to Table of Contents

ServiceWire Co.
Manufacturing quality. Delivering service.
Made in the USA
ISO 9001:2008

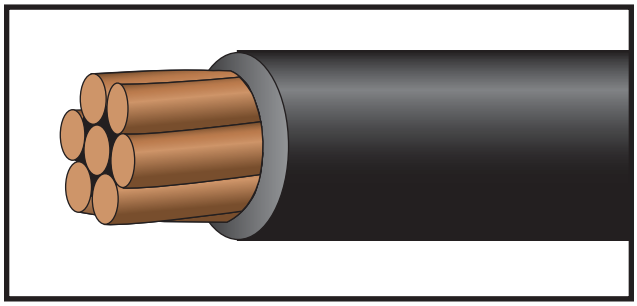

Weatherproof Line Wire HMW-PE / Copper

Solid/Stranded, Soft, Medium Hard, Hard Drawn

Description:
Copper conductor, solid or stranded, soft (annealed), medium hard or hard drawn, covered with black high molecular weight polyethylene (HMW-PE).

Application:
Suitable for use in overhead distribution systems where protection from environmental elements is required.

Standards:
ASTM standards:
- B-1 (hard drawn)
- B-2 (medium hard drawn)
- B-3 (soft or annealed)
- B-8 (concentric lay stranded)
- Strand Class A, AA (1 AWG - 4/0 AWG)

ANSI C8.35/ICEA S-70-547
Sunlight Resistant
RoHS Compliant

	Part Number	Size AWG or Kcmil	Stranding	Covering Thickness (mils)	Nominal Diameter Overall (inch)	DC Resistance (OHMS/1000') @ 20°C			Approx. Net Weight (lb/1000')	Ampacity* (amps)
						Hard Drawn	Medium Drawn	Soft (annealed)		
WEATHERPROOF LINE WIRE	PESOS6	6	1	30	0.22	0.411	0.409	0.395	87	130
	PESOS4	4	1	30	0.26	0.258	0.257	0.249	135	163
	PEST7S4	4	7	30	0.29	0.264	0.262	0.254	139	163
	PESOS2	2	1	45	0.35	0.163	0.162	0.156	218	219
	PEST7S2	2	7	45	0.38	0.166	0.165	0.159	224	219
	PEST7S1	1	7	45	0.42	0.132	0.131	0.127	284	258
	PEST7S1/0	1/0	7	60	0.49	0.104	0.104	0.100	358	297
	PEST7S2/0	2/0	7	60	0.53	0.083	0.082	0.080	446	344
	PEST7S3/0	3/0	7	60	0.58	0.066	0.065	0.063	557	401
	PEST7S4/0	4/0	7	60	0.64	0.052	0.052	0.050	696	466
	PEST37S250	250	37	60	0.70	0.044	0.044	0.042	819	519
	PEST37S350	350	37	60	0.80	0.031	0.031	0.030	1,136	645
	PEST37S500	500	37	80	0.97	0.022	0.022	0.021	1,626	812
	PEST37S750	750	61	80	1.16	0.015	0.015	0.014	2,415	1,050
	PEST37S1000	1000	61	95	1.34	0.011	0.011	0.011	3,234	1,253

*Per NEC Table 310.15 (B)(21). Based on conductor temperature of 80°C; ambient temperature of 40°C; 2 ft./sec. wind.
NOTE: The data shown is approximate and subject to standard industry tolerances.

servicewire.com
Phoenix, AZ 877-623-9473
Culloden, WV 800-624-3572
Houston, TX 800-231-9473

ServiceWire Co.
Manufacturing quality. Delivering service.
Made in the USA
ISO 9001: 2008

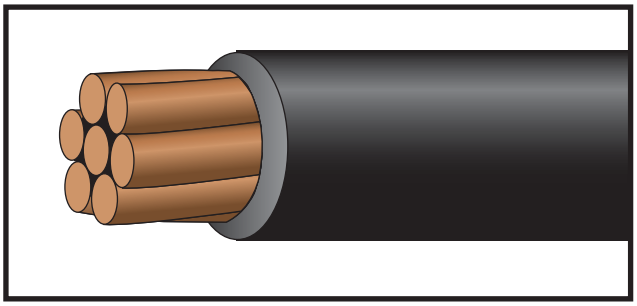

Cathodic Protection Cable

600 Volt Copper

Description:
Stranded copper conductor insulated with black high molecular weight polyethylene (HMW-PE).

Application:
Suitable for direct burial for use in cathodic protection systems for pipelines, storage tanks, pilings, well casings, cables, water storage tanks and other buried or water-submerged metallic structures.

Standards:
ASTM standards:
- B-3 (soft or annealed)
- B-8 (concentric lay stranded)
- D-1248

ICEA S-70-547/NEMA WC-5
Temperature Rated at 75ºC Wet/Dry
Sunlight, Crush, Abrasion, Chemical, Oil and Moisture Resistant
Direct Burial
RoHS Compliant

Part Number	Size AWG or Kcmil	Stranding	Covering Thickness (mils)	Nominal Diameter Overall (inch)	DC Resistance (OHMS/1000') @ 20°C	Approx. Net Weight (lb/1000')
CATH8	8	7	110	0.37	0.652	87
CATH6	6	7	110	0.40	0.397	122
CATH4	4	7	110	0.45	0.254	175
CATH2	2	7	110	0.51	0.159	260
CATH1	1	19	110	0.58	0.127	330
CATH1/0	1/0	19	110	0.62	0.100	400
CATH2/0	2/0	19	110	0.66	0.080	495
CATH4/0	4/0	19	110	0.77	0.050	750
CATH250	250	37	140	0.86	0.042	900
CATH350	350	37	140	0.96	0.030	1,229

NOTE: The data shown is approximate and subject to standard industry tolerances.

servicewire.com
Phoenix, AZ 877-623-9473
Culloden, WV 800-624-3572
Houston, TX 800-231-9473

RETURN to Table of Contents

ServiceWire Co.
Manufacturing quality. Delivering service.
Made in the USA
ISO 9001: 2008

Transformer Riser Wire

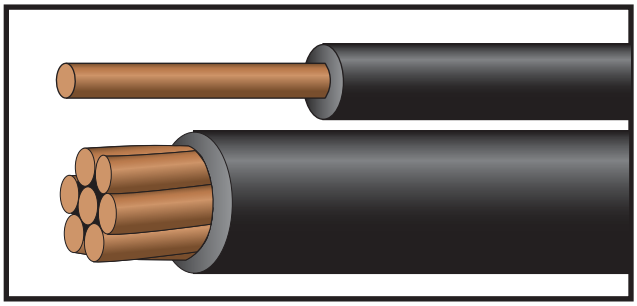

Description & Features:
Solid or stranded copper conductor, covered with black, high molecular weight polyethylene (HMW-PE).

Application:
Suitable for use in uninsulated transformer wire applications. Intended to eliminate faults due to atmospheric conditions, vibrations and faulting caused by objects crossing the leads. Suitable for riser applications at elevated voltages.

Standards:
ASTM standards:
- B-3 (soft or annealed)
- B-8 (concentric lay stranded)
- D-1248

ICEA S-70-547/NEMA WC-5
Sunlight Resistant
Crush, Abrasion, Chemical, Oil, and Moisture Resistant
Direct Burial
RoHS Compliant

Part Number	Size (AWG)	Stranding	Covering Thickness (mils)	Nominal Diameter Overall (inch)	DC Resistance (OHMS/1000') @ 20ºC	Approx. Net Weight (lb/1000')
RISER8	8	1	110	0.35	0.6532	83
RISER8-7	8	7	110	0.37	0.6532	87
RISER6	6	1	110	0.38	0.4110	118
RISER6-7	6	7	110	0.40	0.4109	122
RISER4	4	1	110	0.42	0.2590	171
RISER4-7	4	7	110	0.45	0.2584	177
RISER2	2	1	110	0.48	0.1627	253
RISER2-7	2	7	110	0.51	0.1625	261

NOTE: The data shown is approximate and subject to standard industry tolerances.

servicewire.com
Phoenix, AZ 877-623-9473
Culloden, WV 800-624-3572
Houston, TX 800-231-9473

RETURN to Table of Contents

ServiceWire Co.
Manufacturing quality. Delivering service.
Made in the USA
ISO 9001: 2008

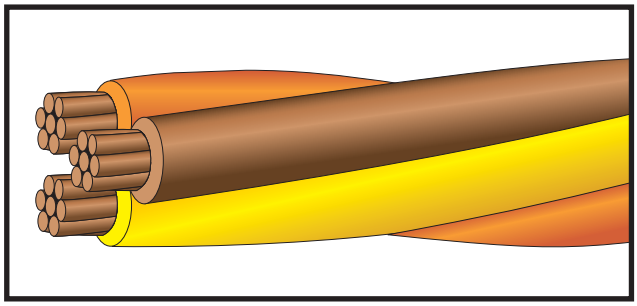

ServicePlex®

XHHW-2 600 Volt Copper Twisted Cable

Description:
Multiple single copper conductors, stranded, insulated with moisture, heat and flame resistant, chemically crosslinked polyethylene (type XHHW-2), and twisted together to effectively function as a single cable. **Available in colors.**

Application:
Suitable for general purpose wiring, for power distribution and branch circuit wiring where a cable having superior flame retardance is required. Suitable for use in 105ºC dry systems. Also suitable for use in low leakage circuits requiring a dielectric constant of 3.5 or less (Hospital Grade).

Standards:
ASTM Standards:
- B-3 (soft and annealed)
- B-8 (concentric lay stranded)
- B-787 (combination strand)

UL 44
C(UL)US RW90: CSA/UL Listed
CSA C22.2
ICEA S-95-658/NEMA WC-70
Federal Spec. A-A-59544
Flame Rated: CT Use (1/0 AWG and larger)
Temperature Rated at 90ºC Wet/Dry
Cold Temperature Rated at -40°C
Sunlight Resistant
Gasoline and Oil Resistant II
RoHS Compliant

	Part Number	Size AWG or Kcmil	Strand (no.)	Insulation Thickness (mils)	Approx. Diameter Overall (inch)	Approx. Net Weight (lb/1000')
THREE CONDUCTOR	SPLEX14/3	14	7	30	0.29	54
	SPLEX12/3	12	7	30	0.33	81
	SPLEX10/3	10	7	30	0.38	119
	SPLEX8/3	8	7	45	0.50	195
	SPLEX6/3	6	7	45	0.58	297
	SPLEX4/3	4	7	45	0.69	456
	SPLEX3/3	3	7	45	0.74	565
	SPLEX2/3	2	7	45	0.81	703
	SPLEX1/3	1	19	55	0.92	890
	SPLEX1/03	1/0	19	55	1.01	1,117
	SPLEX2/03	2/0	19	55	1.10	1,394
	SPLEX3/03	3/0	19	55	1.21	1,740
	SPLEX4/03	4/0	19	55	1.33	2,176
	SPLEX250/3	250	37	65	1.51	2,555
	SPLEX350/3	350	37	65	1.74	3,534
	SPLEX500/3	500	37	65	1.99	4,989
	SPLEX600/3	600	61	80	2.26	6,017
	SPLEX750/3	750	61	80	2.47	7,468

	Part Number	Size AWG or Kcmil	Strand (no.)	Insulation Thickness (mils)	Approx. Diameter Overall (inch)	Approx. Net Weight (lb/1000')
FOUR CONDUCTOR	SPLEX14/4	14	7	30	0.32	72
	SPLEX12/4	12	7	30	0.37	107
	SPLEX10/4	10	7	30	0.42	159
	SPLEX8/4	8	7	45	0.56	260
	SPLEX6/4	6	7	45	0.65	395
	SPLEX4/4	4	7	45	0.77	607
	SPLEX3/4	3	7	45	0.83	753
	SPLEX2/4	2	7	45	0.90	937
	SPLEX1/4	1	19	55	1.03	1,187
	SPLEX1/04	1/0	19	55	1.13	1,490
	SPLEX2/04	2/0	19	55	1.24	1,858
	SPLEX3/04	3/0	19	55	1.35	2,319
	SPLEX4/04	4/0	19	55	1.49	2,901
	SPLEX250/4	250	37	65	1.69	3,407
	SPLEX350/4	350	37	65	1.95	4,712
	SPLEX500/4	500	37	65	2.23	6,652
	SPLEX600/4	600	61	80	2.53	8,023
	SPLEX750/4	750	61	80	2.76	9,958

NOTE: The data shown is approximate and subject to standard industry tolerances.

servicewire.com
Phoenix, AZ 877-623-9473
Culloden, WV 800-624-3572
Houston, TX 800-231-9473

RETURN to Table of Contents

ServiceWire Co.
Manufacturing quality. Delivering service.
Made in the USA
ISO 9001:2008

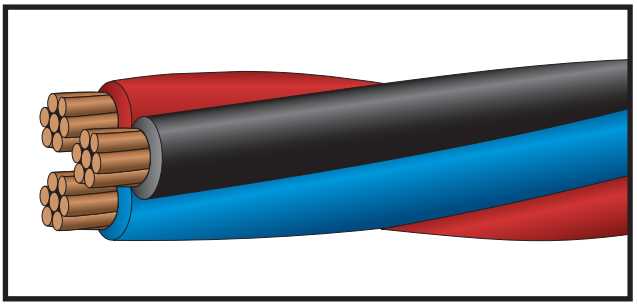

ServicePlex®

USE-2, RHH or RHW-2 600 Volt Copper Twisted Cable

Description:
Multiple single copper conductors, stranded, insulated with moisture and heat resistant, chemically crosslinked polyethylene (type RHW-2), and twisted together to effectively function as a single cable. **Available in colors.**

Application:
Suitable for general purpose wiring applications and may be installed in raceway, conduit, direct burial and aerial installations where a cable having superior flame retardance is required. Suitable for use in 105ºC dry systems. Also suitable for use in low leakage circuits requiring a dielectric constant of 3.5 or less (Hospital Grade).

Standards:
ASTM Standards:
- B-3 (soft or annealed)
- B-8 (concentric lay stranded)
- B-787 (combination strand)

UL 44 and UL 854
CSA C22.2
C(UL)US RW90 1kV: CSA/UL Listed
ICEA S-95-658/NEMA WC-70
Federal Spec. A-A-59544
Flame Rated: CT Use (1/0 AWG and larger)
Temperature Rated at 90ºC Wet/Dry
Cold Temperature Rated at -40°C
Sunlight Resistant
Gasoline and Oil Resistant II
Direct Burial
RoHS Compliant

	Part Number	Size AWG or Kcmil	Strand (no.)	Insulation Thickness (mils)	Approx. Diameter Overall (inch)	Approx. Net Weight (lb/1000')
THREE CONDUCTOR	SPLEX14/3U	14	7	45	0.35	64
	SPLEX12/3U	12	7	45	0.39	92
	SPLEX10/3U	10	7	45	0.44	131
	SPLEX8/3U	8	7	60	0.57	211
	SPLEX6/3U	6	7	60	0.65	315
	SPLEX4/3U	4	7	60	0.75	477
	SPLEX3/3U	3	7	60	0.81	587
	SPLEX2/3U	2	7	60	0.87	728
	SPLEX1/3U	1	19	80	1.03	938
	SPLEX1/03U	1/0	19	80	1.11	1,173
	SPLEX2/03U	2/0	19	80	1.21	1,454
	SPLEX3/03U	3/0	19	80	1.31	1,806
	SPLEX4/03U	4/0	19	80	1.44	2,248
	SPLEX250/3U	250	37	95	1.64	2,654
	SPLEX350/3U	350	37	95	1.87	3,647
	SPLEX500/3U	500	37	95	2.12	5,118
	SPLEX600/3U	600	61	110	2.39	6,221
	SPLEX750/3U	750	61	110	2.60	7,627

	Part Number	Size AWG or Kcmil	Strand (no.)	Insulation Thickness (mils)	Approx. Diameter Overall (inch)	Approx. Net Weight (lb/1000')
FOUR CONDUCTOR	SPLEX14/4U	14	7	45	0.39	85
	SPLEX12/4U	12	7	45	0.44	122
	SPLEX10/4U	10	7	45	0.49	175
	SPLEX8/4U	8	7	60	0.64	281
	SPLEX6/4U	6	7	60	0.73	419
	SPLEX4/4U	4	7	60	0.85	636
	SPLEX3/4U	3	7	60	0.90	783
	SPLEX2/4U	2	7	60	0.98	970
	SPLEX1/4U	1	19	80	1.15	1,250
	SPLEX1/04U	1/0	19	80	1.25	1,564
	SPLEX2/04U	2/0	19	80	1.36	1,939
	SPLEX3/04U	3/0	19	80	1.47	2,407
	SPLEX4/04U	4/0	19	80	1.62	2,997
	SPLEX250/4U	250	37	95	1.84	3,539
	SPLEX350/4U	350	37	95	2.09	4,863
	SPLEX500/4U	500	37	95	2.38	6,824
	SPLEX600/4U	600	61	110	2.68	8,295
	SPLEX750/4U	750	61	110	2.91	10,169

NOTE: The data shown is approximate and subject to standard industry tolerances.

servicewire.com
Phoenix, AZ 877-623-9473
Culloden, WV 800-624-3572
Houston, TX 800-231-9473

ServiceWire Co.
Manufacturing quality. Delivering service.
Made in the USA
ISO 9001: 2008

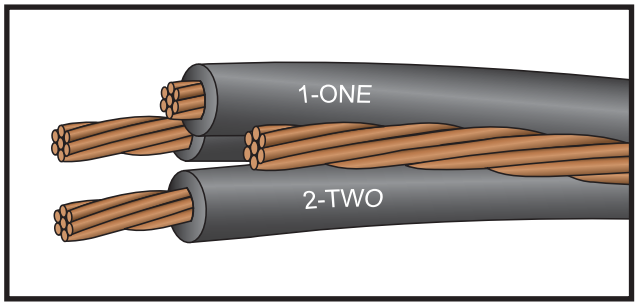

Service Drop

XHHW-2
600 Volt Copper

Description:
Conductors are stranded, bare soft drawn copper, insulated with heat, moisture and sunlight resistant crosslinked polyethylene (type XHHW-2). The neutral is solid or stranded bare, hard drawn copper.

Standards:
ASTM Standards:
- B-1 (hard drawn)
- B-3 (soft drawn or annealed)
- B-8 (concentric-lay strand)
- B-787 (combination unilay)

UL 44
ICEA S-95-658/NEMA WC-70
Temperature Rated at 90°C Wet/Dry
RoHS Compliant

	Part Number	Code Name	Insulated Conductors			Neutral - Messenger		Approx. Net Weight (lb/1000')	Ampacity* (40°C ambient)
			Size AWG or Kcmil	Strand (no.)	Insul. Thick. (mils)	Hard Drawn Size (AWG)	Strand (no.)		
2 INSULATED - 1 BARE	TRI8CUSOL	Bodoni	8	7	45	8	1	180	66
	TRI8CU	Garamond	8	7	45	8	7	182	66
	TRI6CUSOL	Futura	6	7	45	6	1	276	89
	TRI6CU	Gothic	6	7	45	6	7	281	89
	TRI4CUSOL	Ionic	4	7	45	4	1	427	117
	TRI4CU	Caslon	4	7	45	4	7	435	117
	TRI2CU	Century	2	7	45	2	7	678	158
	TRI1/0CU	Corinthian	1/0	19	55	1/0	7	1,077	214
	TRI2/0CU	Doric	2/0	19	55	2/0	7	1,348	247
	TRI3/0CU	Tuscan	3/0	19	55	3/0	7	1,688	287
	TRI4/0CU	Composite	4/0	19	55	4/0	7	2,130	335
	TRI250CU	Roman	250	37	65	250	37	2,491	374
	TRI350CU	Helvetica	350	37	65	350	37	3,459	464
	TRI500CU	Deville	500	37	65	500	37	4,901	580
3 INSULATED - 1 BARE	QUAD8CU	Huntington	8	7	45	8	7	247	66
	QUAD6CUSOL	Atlanta	6	7	45	6	1	373	89
	QUAD6CU	Tallahassee	6	7	45	6	7	379	89
	QUAD4CUSOL	Baton Rouge	4	7	45	4	1	576	117
	QUAD4CU	Richmond	4	7	45	4	7	587	117
	QUAD2CUSOL	Jackson	2	7	45	2	1	896	158
	QUAD2CU	Seattle	2	7	45	2	7	912	158
	QUAD1/0CU	Nashville	1/0	19	55	1/0	7	1,450	214
	QUAD2/0CU	Lincoln	2/0	19	55	2/0	7	1,813	247
	QUAD3/0CU	Raleigh	3/0	19	55	3/0	7	2,268	287
	QUAD4/0CU	Denver	4/0	19	55	4/0	7	2,855	335
	QUAD250CU	Pittsburgh	250	37	65	250	37	3,343	374
	QUAD350CU	Houston	350	37	65	350	37	4,637	464
	QUAD500CU	Culloden	500	37	65	500	37	6,564	580

*Per NEC Table 310.15 (B)(20). Ampacity figures are based on conductor temperature of 90°C, ambient temperature of 40°C.
NOTE: The data shown is approximate and subject to standard industry tolerances.

servicewire.com
Phoenix, AZ 877-623-9473
Culloden, WV 800-624-3572
Houston, TX 800-231-9473

RETURN to Table of Contents

ServiceWire Co.
Manufacturing quality. Delivering service.
Made in the USA
ISO 9001: 2008

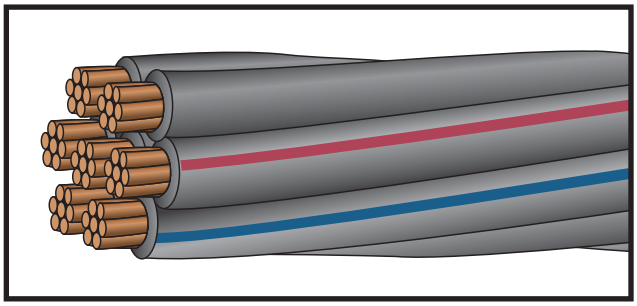

400 Hz Cable

XHHW-2
600 Volt Copper

Description:
Conductors are soft drawn copper, stranded and insulated with crosslinked polyethylene (type XHHW-2). Rated for 600 volts. Conductors are twisted in a six-around-one construction and phase identified per customer specifications.

Application:
Suitable for use as a power source for mainframe computers, TV and radio station output power supply, aircraft ground power supplies at airport terminals, plus many other applications.

Lowers overall impedance of circuit, using multiple smaller conductors, which minimize voltage drop; a critical factor for 400 Hz computer power.

Standards:
ASTM Standards:
- B-3 (soft or annealed)
- B-8 (concentric lay stranded)

UL 44
ICEA S-95-658/NEMA WC-70
Sunlight Resistant
RoHS Compliant

	Part Number	Size AWG or Kcmil	Strand (no.)	Insulation Thickness (mils)	Approx. Diameter Overall (inch)	Approx. Net Weight (lb/1000')
400 Hz CABLE	SPLEX4/7	4	7	45	0.96	1,062
	SPLEX2/7	2	7	45	1.12	1,640
	SPLEX1/7	1	19	55	1.28	2,077
	SPLEX1/07	1/0	19	55	1.40	2,607
	SPLEX2/07	2/0	19	55	1.54	3,251
	SPLEX3/07	3/0	19	55	1.68	4,059
	SPLEX4/07	4/0	19	55	1.86	5,076
	SPLEX250/7	250	37	65	2.11	5,962
	SPLEX350/7	350	37	65	2.42	8,246
	SPLEX500/7	500	37	65	2.78	11,640

*Ampacity is derated due to the fact that this is a multi-conductor assembly.
NOTE: The data shown is approximate and subject to standard industry tolerances.

servicewire.com
Phoenix, AZ 877-623-9473
Culloden, WV 800-624-3572
Houston, TX 800-231-9473

RETURN to Table of Contents

ServiceWire Co.
Manufacturing quality. Delivering service.
Made in the USA
ISO 9001: 2008

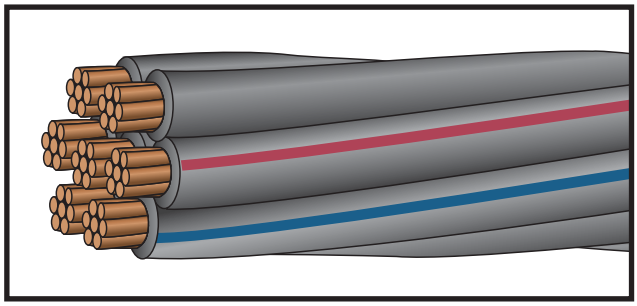

400 Hz Cable

USE-2, RHH or RHW-2
600 Volt Copper

Description:
Conductors are soft drawn copper, stranded and insulated with crosslinked polyethylene (type USE-2). Rated for 600 volts. Conductors are twisted in a six-around-one construction and phase identified per customer specifications.

Application:
Suitable for use as a power source for mainframe computers, TV and radio station output power supply, aircraft ground power supplies at airport terminals, plus many other applications.

Lowers overall impedance of circuit, using multiple smaller conductors, which minimize voltage drop; a critical factor for 400 Hz computer power.

Standards:
ASTM Standards:
- B-3 (soft or annealed)
- B-8 (concentric lay stranded)

UL 44
ICEA S-95-658/NEMA WC-70
Sunlight Resistant
RoHS Compliant

	Part Number	Size AWG or Kcmil	Strand (no.)	Insulation Thickness (mils)	Approx. Diameter Overall (inch)	Approx. Net Weight (lb/1000')
400 Hz CABLE	SPLEX4/7U	4	7	60	1.05	1,112
	SPLEX2/7U	2	7	60	1.21	1,697
	SPLEX1/7U	1	19	80	1.43	2,188
	SPLEX1/07U	1/0	19	80	1.55	2,736
	SPLEX2/07U	2/0	19	80	1.69	3,392
	SPLEX3/07U	3/0	19	80	1.83	4,212
	SPLEX4/07U	4/0	19	80	2.01	5,245
	SPLEX250/7U	250	37	95	2.29	6,192
	SPLEX350/7U	350	37	95	2.60	8,509
	SPLEX500/7U	500	37	95	2.96	11,941

*Ampacity is derated due to the fact that this is a multi-conductor assembly.
NOTE: The data shown is approximate and subject to standard industry tolerances.

servicewire.com
Phoenix, AZ 877-623-9473
Culloden, WV 800-624-3572
Houston, TX 800-231-9473

RETURN to Table of Contents

ServiceWire Co.
Manufacturing quality. Delivering service.
Made in the USA
ISO 9001:2008

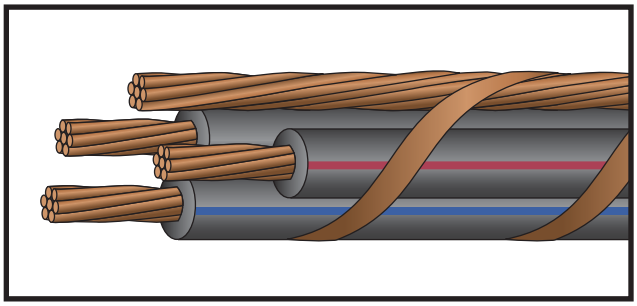

Preassembled Aerial Cable

XHHW-2
600 Volt Copper

Description:
3 or 4 stranded, bare annealed copper conductors, insulated with heat and moisture resistant crosslinked polyethylene (type XHHW-2). Conductors are cabled with a left hand lay and a messenger of 30% EHS copperweld laid parallel and bound with a flat bare copper binding strap.

Standard:
UL 44 (single conductors)
ICEA S-95-658/NEMA WC-70
Sunlight Resistant
RoHS Compliant

NOTE: Optional constructions include galvanized or stainless steel messengers, PVC coated copper and stainless steel strap.

	Part Number	Size AWG or Kcmil	Strand (no.)	Insulation Thickness (mils)	Messenger Size **		Approx. Diameter Overall (inch)	Approx. Net Weight (lb/1000')	Ampacity* (40°C ambient)
					(inch)	Strand (no.)			
3 INSULATED - 1 MESSENGER	AER1/4C8/3	8	7	45	1/4	7	0.74	428	66
	AER1/4C6/3	6	7	45	1/4	7	0.83	532	89
	AER1/4C4/3	4	7	45	1/4	7	0.93	695	117
	AER1/4C2/3	2	7	45	1/4	7	1.05	947	158
	AER1/4C1/3	1	19	55	1/4	7	1.16	1,139	185
	AER1/4C1/03	1/0	19	55	1/4	7	1.25	1,369	214
	AER5/16C2/03	2/0	19	55	5/16	7	1.41	1,728	247
	AER5/16C3/03	3/0	19	55	5/16	7	1.51	2,078	287
	AER3/8C4/03	4/0	19	55	3/8	7	1.72	2,643	335
	AER3/8C250/3	250	37	65	3/8	7	1.90	3,030	374
	AER1/2C350/3	350	37	65	1/2	7	2.22	4,214	464
	AER9/16C500/3	500	37	65	9/16	7	2.54	5,817	580
	AER9/16C750/3	750	61	80	9/16	7	3.01	8,315	747
4 INSULATED - 1 MESSENGER	AER1/4C8/4	8	7	45	1/4	7	0.81	495	66
	AER1/4C6/4	6	7	45	1/4	7	0.90	633	89
	AER1/4C4/4	4	7	45	1/4	7	1.02	850	117
	AER1/4C2/4	2	7	45	1/4	7	1.15	1,185	158
	AER1/4C1/4	1	19	55	1/4	7	1.27	1,439	185
	AER5/16C1/04	1/0	19	55	5/16	7	1.43	1,825	214
	AER5/16C2/04	2/0	19	55	5/16	7	1.54	2,197	247
	AER3/8C3/04	3/0	19	55	3/8	7	1.74	2,788	287
	AER3/8C4/04	4/0	19	55	3/8	7	1.88	3,374	335
	AER1/2C250/4	250	37	65	1/2	7	2.18	4,085	374
	AER1/2C350/4	350	37	65	1/2	7	2.43	5,400	464
	AER9/16C500/4	500	37	65	9/16	7	2.78	7,489	580
	AER9/16C750/4	750	61	80	9/16	7	3.31	10,815	747

*Per NEC Table 310.15 (B)(20). 4-Conductor ampacity assumes three are hot and one is neutral.
**Messenger size based on 150' span with sag of 2.5 ft.
NOTE: The data shown is approximate and subject to standard industry tolerances.

servicewire.com
Phoenix, AZ 877-623-9473
Culloden, WV 800-624-3572
Houston, TX 800-231-9473

RETURN to Table of Contents

ServiceWire Co.
Manufacturing quality. Delivering service.
Made in the USA

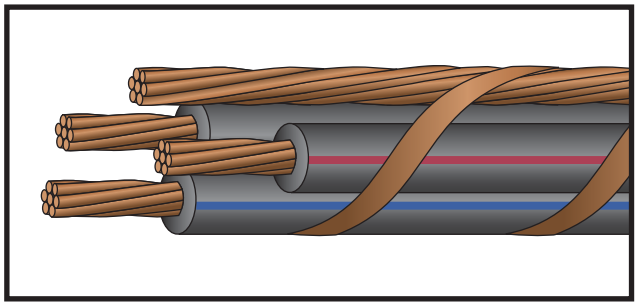

Preassembled Aerial Cable

Jacketed EPR, Nonshielded MV-90 2,400 Volt Copper

Description:
Class B stranded copper, extruded conductor shield, insulated with heat and moisture resistant EPR. Conductors are cabled with a left hand lay and laid parallel to a 30% EHS copperweld messenger then bound with a flat copper binding strap.

Applications:
Where NEC jurisdiction applies. 2,400 volt nonshielded power cable (type MV-90) for conductor temperatures not exceeding 90°C.

Standards:
UL 1072 (single conductors)
ICEA S-96-659/NEMA WC-71
Sunlight Resistant
RoHS Compliant

NOTE: Optional constructions include galvanized or stainless steel messengers, PVC coated copper and stainless steel strap.

Twisted Cables

	Part Number	Size AWG or Kcmil	Strand (no.)	Insulation Thickness (mils)	Messenger Size **		Approx. Diameter Overall (inch)	Approx. Net Weight (lb/1000')	Ampacity* (40°C ambient)
					(inch)	Strand (no.)			
NON-SHIELDED	AR1/4C2.4K8/3E	8	7	125	1/4	7	1.50	774	66
	AR1/4C2.4K6/3E	6	7	125	1/4	7	1.58	898	88
	AR1/4C2.4K4/3E	4	7	125	1/4	7	1.69	1,100	115
	AR1/4C2.4K2/3E	2	7	125	1/4	7	1.82	1,393	154
	AR1/4C2.4K1/03E	1/0	19	125	1/4	7	1.97	1,856	205
	AR5/16C2.4K2/03E	2/0	19	125	5/16	7	2.14	2,242	240
	AR3/8C2.4K4/03E	4/0	19	125	3/8	7	2.57	3,490	320
	AR3/8C2.4K250/3E	250	37	140	3/8	7	2.74	3,907	355
	AR1/2C2.4K350/3E	350	37	140	1/2	7	3.06	5,178	440
	AR9/16C2.4K500/3E	500	37	140	9/16	7	3.40	6,898	545
	AR9/16C2.4K750/3E	750	61	155	9/16	7	3.91	9,786	685

*Per NEC Table 310.60 (C)(71).
**Messenger size based on 150' span with sag of 2.5 ft.
NOTE: The data shown is approximate and subject to standard industry tolerances.

servicewire.com
Phoenix, AZ 877-623-9473
Culloden, WV 800-624-3572
Houston, TX 800-231-9473

RETURN to Table of Contents

ServiceWire Co.
Manufacturing quality. Delivering service.
Made in the USA
ISO 9001:2008

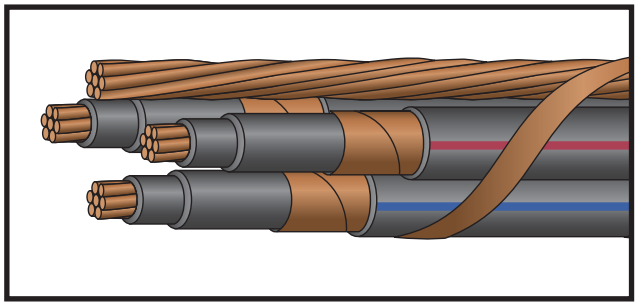

Preassembled Aerial Cable

Jacketed EPR, Shielded MV-105 5,000 Volt Copper

Description:
Class B stranded copper, extruded semi-conductor shield, insulated with heat and moisture resistant EPR, copper shield (stranded or tape), with conductor jacket (PVC, CPE, etc.) Conductors are cabled with a left hand lay and laid parallel to a 30% EHS copperweld messenger then bound with a flat copper binding strap.

Standards:
UL 1072 (single conductors)
ICEA S-93-639/NEMA WC-74
Sunlight Resistant
RoHS Compliant

NOTE: Optional constructions include galvanized or stainless steel messengers, PVC coated copper or PVC coated stainless steel strap.

	Part Number	Size AWG or Kcmil	Strand (no.)	Insulation Thickness (mils)	Jacket Thickness (mils)	Messenger Size **		Approx. Diameter Overall (inch)	Approx. Net Weight (lb/1000')	Ampacity* (40°C ambient)
						(inch)	Strand (no.)			
SHIELDED	AR5/16C5KS6/3E	6	7	115	60	5/16	7	1.76	1,250	88
	AR5/16C5KS4/3E	4	7	115	60	5/16	7	1.88	1,500	115
	AR5/16C5KS2/3E	2	7	115	60	5/16	7	1.99	1,795	154
	AR5/16C5KS1/03E	1/0	19	115	80	5/16	7	2.27	2,418	205
	AR3/8C5KS2/03E	2/0	19	115	80	3/8	7	2.46	2,883	240
	AR1/2C5KS4/03E	4/0	19	115	80	1/2	7	2.75	3,975	320
	AR9/16C5KS250/3E	250	37	115	80	9/16	7	2.94	4,592	355
	AR9/16C5KS350/3E	350	37	115	80	9/16	7	3.16	5,687	440
	AR9/16C5KS500/3E	500	37	115	80	9/16	7	3.48	7,382	545
	AR9/16C5KS750/3E	750	61	115	80	9/16	7	3.89	10,137	685

*Per NEC Table 310.60 (C)(71).
**Messenger size based on 150' span with sag of 2.5 ft.
NOTE: The data shown is approximate and subject to standard industry tolerances.

servicewire.com
Phoenix, AZ 877-623-9473
Culloden, WV 800-624-3572
Houston, TX 800-231-9473

RETURN to Table of Contents

ServiceWire Co.
Manufacturing quality. Delivering service.
Made in the USA

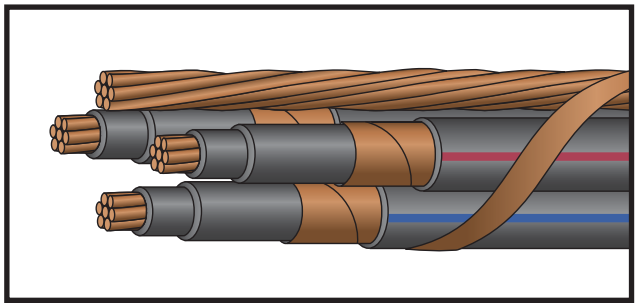

Preassembled Aerial Cable

133% Jacketed EPR
MV-105 15,000 Volt Copper

Description:
Class B stranded copper, extruded semi-conductor shield, insulated with heat and moisture resistant EPR, 133% insulation level, with conductor jacket (PVC, CPE, etc.) Conductors are cabled with a left hand lay and laid parallel to the 30% EHS copperweld messenger, bound with a rounded-edge flat PVC coated copper binding strap.

Standards:
UL 1072 (single conductors)
ICEA S-93-639/NEMA WC-74
Sunlight Resistant
RoHS Compliant

NOTE: Optional constructions include: galvanized or stainless steel messengers, PVC coated copper or PVC coated stainless steel strap.

Twisted Cables

	Part Number	Size AWG or Kcmil	Strand (no.)	Insulation Thickness (mils)	Jacket Thickness (mils)	Messenger Size **		Approx. Diameter Overall (inch)	Approx. Net Weight (lb/1000')	Ampacity* (40°C ambient)
						(inch)	Strand (no.)			
133% EPR INSULATION	AR3/8C15K2/3E	2	7	220	80	3/8	7	2.63	2,599	185
	AR1/2C15K1/3E	1	19	220	80	1/2	7	2.82	3,029	210
	AR1/2C15K1/03E	1/0	19	220	80	1/2	7	2.93	3,370	240
	AR1/2C15K2/03E	2/0	19	220	80	1/2	7	3.03	3,756	275
	AR9/16C15K4/03E	4/0	19	220	80	9/16	7	3.27	4,758	360
	AR9/16C15K250/3E	250	37	220	80	9/16	7	3.44	5,346	400
	AR9/16C15K350/3E	350	37	220	80	9/16	7	3.65	6,502	490
	AR9/16C15K500/3E	500	37	220	80	9/16	7	3.93	8,211	600
	AR9/16C15K750/3E	750	61	220	110	9/16	7	4.47	11,353	745

*Per NEC Table 310.60 (C)(71).
**Messenger size based on 150' span with sag of 2.5 ft.
NOTE: The data shown is approximate and subject to standard industry tolerances.

servicewire.com
Phoenix, AZ 877-623-9473
Culloden, WV 800-624-3572
Houston, TX 800-231-9473

RETURN to Table of Contents

ServiceWire Co.
Manufacturing quality. Delivering service.
Made in the USA
ISO 9001:2008

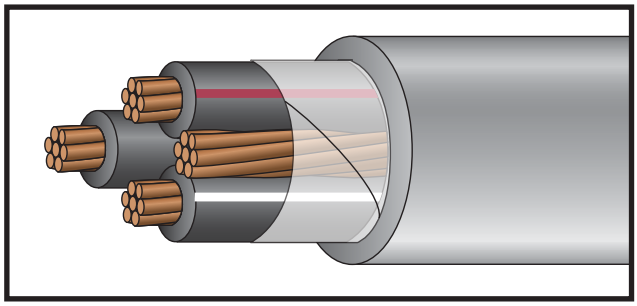

SE-R

XHHW-2/PVC Service Entrance 600 Volt Copper

Description:
3 conductors, stranded, insulated with heat and moisture resistant crosslinked polyethylene (type XHHW-2) and phase identified. Cabled with bare copper ground conductor. Cable core covered with flame retardant binder tape and overall grey PVC jacket.

Standards:
UL 44 and UL 854
ICEA S-95-658/NEMA WC70
Temperature Rated at 90°C Wet/Dry
Sunlight Resistant
Color Code: K-1 Stripes
RoHS Compliant

	Part Number	Size AWG	Strand (no.)	Insulation Thickness (mils)	Grounding Conductor (AWG)	PVC Jacket Thickness (mils)	Approx. Diameter Overall (inch)	Approx. Net Weight (lb/1000')	Ampacity* (30°C ambient) 90°C Wet/Dry
THREE CONDUCTOR	SER6/3G6	6	7	45	6	30	0.75	432	75
	SER4/3G6	4	7	45	6	30	0.82	597	95
	SER3/3G5	3	7	45	5	30	0.92	747	115
	SER2/3G4	2	7	45	4	30	0.97	901	130
	SER1/3G3	1	19	55	3	30	1.09	1,122	145
	SER1/03G2	1/0	19	55	2	30	1.19	1,387	170
	SER2/03G1	2/0	19	55	1	30	1.29	1,719	195
	SER3/03G1/0	3/0	19	55	1/0	30	1.42	2,138	225
	SER4/03G2/0	4/0	19	55	2/0	30	1.56	2,661	260

*Per NEC Table 310.15 (B)(16).
NOTE: The data shown is approximate and subject to standard industry tolerances.

servicewire.com
Phoenix, AZ 877-623-9473
Culloden, WV 800-624-3572
Houston, TX 800-231-9473

ServiceWire Co.
Manufacturing quality. Delivering service.
Made in the USA
ISO 9001: 2008

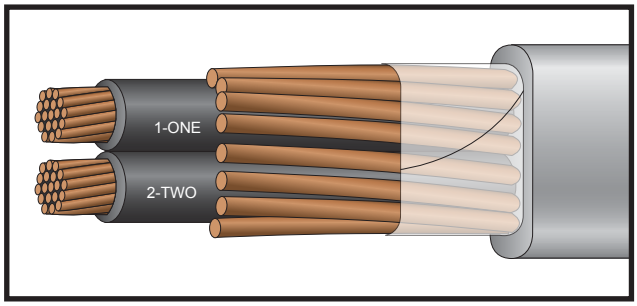

SE-U

XHHW-2/PVC Service Entrance 600 Volt Copper

Description:
2 conductors, stranded, insulated with heat and moisture resistant crosslinked polyethylene (type XHHW-2) and phase identified. Cabled with bare copper ground conductor. Cable core covered with flame retardant binder tape and overall grey PVC jacket.

Standards:
UL 44 and UL 854
ICEA S-95-658/NEMA WC70
Temperature Rated at 90°C Wet/Dry
Sunlight Resistant
Color Code: Method 4
RoHS Compliant

	Part Number	Size AWG	Strand (no.)	Insulation Thickness (mils)	Grounding Conductor (AWG)	Jacket Thickness (mils)	Diameter Overall (inch)	Approx. Net Weight (lb/1000')	Ampacity* (30°C ambient) 90°C Wet/Dry
TWO CONDUCTOR	SEU8/2G8	8	7	45	8	30	0.67	226	55
	SEU6/2G8	6	7	45	8	30	0.75	300	75
	SEU6/2G6	6	7	45	6	30	0.77	330	75
	SEU4/2G6	4	7	45	6	30	0.87	442	95
	SEU4/2G4	4	7	45	4	30	0.90	492	95
	SEU3/2G4	3	7	45	4	30	0.96	560	115
	SEU3/2G3	3	7	45	3	30	0.97	595	115
	SEU2/2G4	2	7	45	4	30	1.02	664	130
	SEU2/2G2	2	7	45	2	30	1.06	744	130
	SEU1/2G1	1	19	55	1	30	1.10	920	145
	SEU1/02G1/0	1/0	19	55	1/0	30	1.20	1,238	170
	SEU2/02G2/0	2/0	19	55	2/0	30	1.32	1,413	195

*Per NEC Table 310.15 (B)(16).
NOTE: The data shown is approximate and subject to standard industry tolerances.

servicewire.com
Phoenix, AZ 877-623-9473
Culloden, WV 800-624-3572
Houston, TX 800-231-9473

RETURN to Table of Contents

ServiceWire Co.
Manufacturing quality. Delivering service.
Made in the USA
ISO 9001:2008

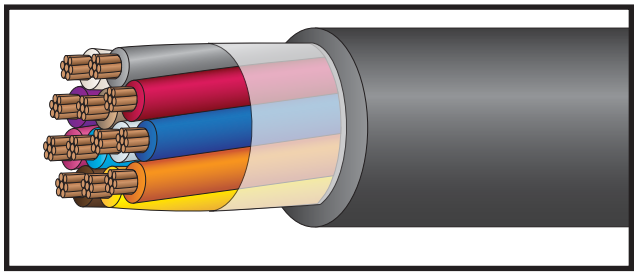

Tray Cable

XHHW-2/PVC
600 Volt Copper

Description:
Class B stranded, annealed copper conductors, insulated with heat and moisture resistant crosslinked polyethylene (type XHHW-2) and phase identified. Cabled with fillers and binders (when necessary). Cable core covered with overall black PVC jacket. **Jacket available in colors.**

Application:
Suitable for use in NEC hazardous locations:
- Class I - Div 2
- Class II - Div 2

Standards:
UL 1277
CSA C22.2 #239 CIC
ICEA S-95-658/NEMA WC-70
Exposed Runs Rated (TC-ER)
IMSA 19-1
Flame Rated: IEEE 383 (70,000 BTU)
ICEA T-29-520 (210,000 BTU) (#14 AWG and larger)
IEEE 1202/CSA FT-4 (#14 AWG and larger)
Two-hour Firewall
VW-1 (conductors) (#14 AWG and larger)
Temperature Rated at 90°C Wet/Dry
Sunlight and Oil Resistant II Jacket
Direct Burial
Color Code: K-2 (optional color codes available)
RoHS Compliant

	Part Number	Number of Conductors	Overall Jacket (mils)	Nominal Diameter (inches)	Approx. Net Weight (lb/1000')
#16 AWG	TCFFH16/2FL	2 (flat)	45	0.33 X 0.21	49
	TCFFH16/3	3	45	0.35	63
	TCFFH16/4	4	45	0.38	77
	TCFFH16/5	5	45	0.41	93
	TCFFH16/7	7	45	0.45	120
	TCFFH16/9	9	60	0.55	166
	TCFFH16/12	12	60	0.64	215
	TCFFH16/19	19	60	0.74	313
	TCFFH16/25	25	60	0.82	428
	TCFFH16/37	37	80	1.02	598
#14 AWG	TCXH14/2FL	2 (flat)	45	0.36 X 0.22	63
	TCXH14/3	3	45	0.38	82
	TCXH14/4	4	45	0.41	103
	TCXH14/5	5	45	0.45	124
	TCXH14/7	7	45	0.49	163
	TCXH14/9	9	60	0.60	223
	TCXH14/12	12	60	0.69	292
	TCXH14/19	19	60	0.80	431
	TCXH14/25	25	80	0.94	584
	TCXH14/37	37	80	1.11	826

	Part Number	Number of Conductors	Overall Jacket (mils)	Nominal Diameter (inches)	Approx. Net Weight (lb/1000')
#12 AWG	TCXH12/2FL	2 (flat)	45	0.39 X 0.24	83
	TCXH12/3	3	45	0.42	112
	TCXH12/4	4	45	0.46	142
	TCXH12/5	5	45	0.50	172
	TCXH12/7	7	60	0.58	245
	TCXH12/9	9	60	0.67	309
	TCXH12/12	12	60	0.77	406
	TCXH12/19	19	80	0.94	643
	TCXH12/25	25	80	1.04	820
	TCXH12/37	37	80	1.24	1,172
#10 AWG	TCXH10/2FL	2 (flat)	45	0.44 X 0.27	113
	TCXH10/3	3	45	0.47	155
	TCXH10/4	4	45	0.51	198
	TCXH10/5	5	60	0.59	258
	TCXH10/7	7	60	0.64	343
	TCXH10/9	9	60	0.75	434
	TCXH10/12	12	80	0.91	606
	TCXH10/19	19	80	1.05	906
	TCXH10/25	25	80	1.18	1,163
	TCXH10/37	37	80	1.40	1,674

NOTE: The data shown is approximate and subject to standard industry tolerances.
NOTE: #16 AWG per UL 66 Fixture Wire type FFH-2

servicewire.com
Phoenix, AZ 877-623-9473
Culloden, WV 800-624-3572
Houston, TX 800-231-9473

RETURN to Table of Contents

ServiceWire Co.
Manufacturing quality. Delivering service.
Made in the USA
ISO 9001: 2008

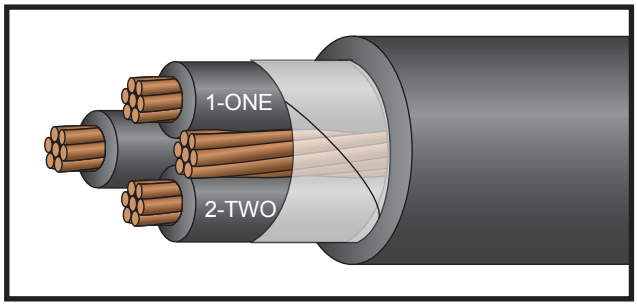

Tray Cable

XHHW-2/PVC
600 Volt Copper

Description:
3 conductors, stranded, insulated with heat and moisture resistant crosslinked polyethylene (type XHHW-2) and phase identified. Cabled with fillers (when necessary) and bare copper ground conductor. Cable core covered with binder tape and overall black PVC jacket. **Jacket available in colors.**

Application:
Suitable for use in NEC hazardous locations:
Class I - Div 2
Class II - Div 2

Standards:
UL 1277
CSA C22.2 #230 TC
ICEA S-95-658/NEMA WC-70
Exposed Runs Rated (TC-ER) (#4 AWG and larger or #6 AWG and smaller with green ground or no ground)
IMSA 19-1
Flame Rated: IEEE 383 (70,000 BTU)
ICEA T-29-520 (210,000 BTU) (1/0 AWG and larger)
IEEE 1202/CSA FT-4 (1/0 AWG and larger)
Two-hour Firewall
Temperature Rated at 90°C Wet/Dry
Sunlight and Oil Resistant II Jacket
Direct Burial
Color Code: Method 4
K-2 (#14 AWG - #8 AWG) (optional color codes available)
RoHS Compliant

	Part Number	Size AWG or Kcmil	Strand (no.)	Insulation Thickness (mils)	Grounding Conductor (AWG)	PVC Jacket Thickness (mils)	Approx. Diameter Overall (inch)	Approx. Net Weight (lb/1000')	Ampacity* (30°C ambient) 90°C Wet/Dry
THREE CONDUCTOR	TCXH14/3G	14	7	30	14	45	0.38	95	25†
	TCXH14/3GG	14	7	30	14	45	0.41	103	25†
	TCXH12/3G	12	7	30	12	45	0.42	132	30†
	TCXH12/3GG	12	7	30	12	45	0.46	142	30†
	TCXH10/3G	10	7	30	10	45	0.47	187	40†
	TCXH10/3GG	10	7	30	10	45	0.51	198	40†
	TCXH8/3G	8	7	45	10	60	0.62	291	55
	TCXH8/3GG	8	7	45	10	60	0.68	305	55
	TCXH6/3G	6	7	45	8	60	0.72	450	75
	TCXH6/3GG	6	7	45	8	60	0.79	481	75
	TCXH4/3G	4	7	45	8	80	0.87	664	95
	TCXH3/3G	3	7	45	6	80	0.92	814	115
	TCXH2/3G	2	7	45	6	80	0.99	971	130
	TCXH1/3G	1	19	55	6	80	1.10	1,191	145
	TCXH1/03G	1/0	19	55	6	80	1.19	1,445	170
	TCXH2/03G	2/0	19	55	6	80	1.28	1,752	195
	TCXH3/03G	3/0	19	55	4	80	1.39	2,177	225
	TCXH4/03G	4/0	19	55	4	80	1.51	2,657	260
	TCXH250/3G	250	37	65	4	110	1.75	3,201	290
	TCXH300/3G	300	37	65	3	110	1.88	3,779	320
	TCXH350/3G	350	37	65	3	110	1.98	4,316	350
	TCXH400/3G	400	37	65	3	110	2.07	4,848	380
	TCXH500/3G	500	37	65	2	110	2.23	5,938	430
	TCXH600/3G	600	61	80	2	110	2.50	7,107	475
	TCXH750/3G	750	61	80	1	110	2.71	8,732	535

*Per NEC Table 310.15 (B)(16). **ER Rated #6 AWG and smaller with green ground or with no ground.
†The overcurrent protection for items marked with an obelisk (†) shall not exceed 15 amps for #14 AWG, 20 amps for #12 AWG and 30 amps for #10 AWG per NEC 310-16 footnote.
NOTE: The data shown is approximate and subject to standard industry tolerances.

servicewire.com
Phoenix, AZ 877-623-9473
Culloden, WV 800-624-3572
Houston, TX 800-231-9473

RETURN to Table of Contents

ServiceWire Co.
Manufacturing quality. Delivering service.
Made in the USA
ISO 9001:2008

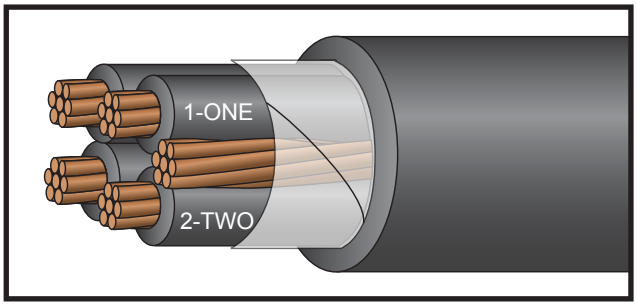

Tray Cable

XHHW-2/PVC
600 Volt Copper

Description:
4 conductors, stranded, insulated with heat and moisture resistant crosslinked polyethylene (type XHHW-2), phase identified and cabled with fillers (when necessary) and bare copper ground conductor. Cable core covered with binder tape, and overall black PVC jacket. **Jacket available in colors.**

Application:
Suitable for use in hazardous locations:
- Class I - Div 2
- Class II - Div 2

Standards:
UL 1277
CSA C22.2 #230 TC
ICEA S-95-658/NEMA WC-70
Exposed Runs Rated (TC-ER) (#4 AWG and larger or #6 AWG and smaller with green ground or no ground)
IMSA 19-1
Flame Rated: IEEE 383 (70,000 BTU)
ICEA T-29-520 (210,000 BTU) (1/0 AWG and larger)
IEEE 1202/CSA FT-4 (1/0 AWG and larger)
Two-hour Firewall
Temperature Rated at 90°C Wet/Dry
Sunlight and Oil Resistant II Jacket
Direct Burial
Color Code: Method 4
K-2 (#14 AWG - #8 AWG) (optional color codes available)
RoHS Compliant

	Part Number	Size AWG or Kcmil	Strand (no.)	Insulation Thickness (mils)	Grounding Conductor (AWG)	PVC Jacket Thickness (mils)	Approx. Diameter Overall (inch)	Approx. Net Weight (lb/1000')	Ampacity* (30°C ambient) 90°C Wet/Dry
FOUR CONDUCTOR	TCXH14/4G	14	7	30	14	45	0.41	116	25†
	TCXH14/4GG	14	7	30	14	45	0.45	124	25†
	TCXH12/4G	12	7	30	12	45	0.46	162	30†
	TCXH12/4GG	12	7	30	12	45	0.50	172	30†
	TCXH10/4G	10	7	30	10	45	0.51	231	40†
	TCXH10/4GG	10	7	30	10	60	0.59	258	40†
	TCXH8/4G	8	7	45	10	60	0.68	363	55
	TCXH8/4GG	8	7	45	10	60	0.74	377	55
	TCXH6/4G	6	7	45	8	60	0.79	560	75
	TCXH6/4GG	6	7	45	8	80	0.91	631	75
	TCXH4/4G	4	7	45	8	80	0.95	833	95
	TCXH3/4G	3	7	45	6	80	1.01	1,021	115
	TCXH2/4G	2	7	45	6	80	1.08	1,226	130
	TCXH1/4G	1	19	55	6	80	1.21	1,512	145
	TCXH1/04G	1/0	19	55	6	80	1.31	1,845	170
	TCXH2/04G	2/0	19	55	6	80	1.42	2,248	195
	TCXH3/04G	3/0	19	55	4	80	1.53	2,792	225
	TCXH4/04G	4/0	19	55	4	110	1.73	3,520	260
	TCXH250/4G	250	37	65	4	110	1.93	4,111	290
	TCXH300/4G	300	37	65	3	110	2.07	4,860	320
	TCXH350/4G	350	37	65	3	110	2.19	5,565	350
	TCXH400/4G	400	37	65	3	110	2.30	6,265	380
	TCXH500/4G	500	37	65	2	110	2.47	7,687	430
	TCXH600/4G	600	61	80	2	140	2.83	9,373	475
	TCXH750/4G	750	61	80	1	140	3.06	11,509	535

*Per NEC Table 310.15 (B)(16). 4-Conductor ampacity assumes three are hot and one is neutral.
†The overcurrent protection for items marked with an obelisk (†) shall not exceed 15 amps for #14 AWG, 20 amps for #12 AWG and 30 amps for #10 AWG per NEC 310-16 footnote.
NOTE: The data shown is approximate and subject to standard industry tolerances.

servicewire.com
Phoenix, AZ 877-623-9473
Culloden, WV 800-624-3572
Houston, TX 800-231-9473

RETURN to Table of Contents

ServiceWire Co.
Manufacturing quality. Delivering service.
Made in the USA
ISO 9001: 2008

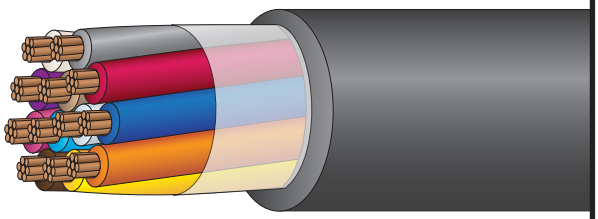

Available with tinned conductors

Tray Cable

XHHW-2/ServiceCPE® 600 Volt Copper

Description:
Class B stranded, annealed copper conductors, insulated with heat and moisture resistant crosslinked polyethylene (type XHHW-2 VW-1) and phase identified. Cabled with overall black CPE jacket.

Application:
Suitable for use in hazardous locations:
- Class I - Div 2
- Class II - Div 2

Standards:
UL 1277
CSA C22.2 #239 CIC
ICEA S-95-658/NEMA WC-70
Exposed Runs Rated (TC-ER)
IMSA 19-1
Flame Rated: IEEE 383 (70,000 BTU) (#14 AWG and larger)
T-29-520 (210,000 BTU) (#14 AWG and larger)
IEEE 1202/CSA FT-4 (#14 AWG and larger)
Two-hour Firewall
VW-1 (conductors) (#14 AWG and larger)
Temperature Rated at 90°C Wet/Dry
Sunlight and Oil Resistant I Jacket
Direct Burial
Color Code: K-2 (optional color codes available)
RoHS Compliant

	Part Number	Number of Conductors	Overall Jacket (mils)	Nominal Diameter (inches)	Approx. Net Weight (lb/1000')
#16 AWG	TCCPE16/2FL	2	45	0.33x0.21	49
	TCCPE16/3	3	45	0.35	63
	TCCPE16/4	4	45	0.38	78
	TCCPE16/5	5	45	0.41	93
	TCCPE16/7	7	45	0.45	120
	TCCPE16/9	9	60	0.55	167
	TCCPE16/12	12	60	0.64	217
	TCCPE16/19	19	60	0.74	315
	TCCPE16/25	25	60	0.82	399
	TCCPE16/37	37	80	1.02	602
#14 AWG	TCCPE14/2FL	2	45	0.36x0.22	63
	TCCPE14/3	3	45	0.38	83
	TCCPE14/4	4	45	0.41	103
	TCCPE14/5	5	45	0.45	125
	TCCPE14/7	7	45	0.49	164
	TCCPE14/9	9	60	0.60	223
	TCCPE14/12	12	60	0.69	293
	TCCPE14/19	19	60	0.80	432
	TCCPE14/25	25	80	0.94	586
	TCCPE14/37	37	80	1.11	829

	Part Number	Number of Conductors	Overall Jacket (mils)	Nominal Diameter (inches)	Approx. Net Weight (lb/1000')
#12 AWG	TCCPE12/2FL	2	45	0.39x0.24	84
	TCCPE12/3	3	45	0.42	112
	TCCPE12/4	4	45	0.46	142
	TCCPE12/5	5	45	0.50	173
	TCCPE12/7	7	60	0.58	246
	TCCPE12/9	9	60	0.67	310
	TCCPE12/12	12	60	0.77	408
	TCCPE12/19	19	80	0.94	645
	TCCPE12/25	25	80	1.04	822
	TCCPE12/37	37	80	1.24	1174
#10 AWG	TCCPE10/2FL	2	45	0.44x0.27	113
	TCCPE10/3	3	45	0.47	155
	TCCPE10/4	4	45	0.51	199
	TCCPE10/5	5	60	0.59	259
	TCCPE10/7	7	60	0.64	344
	TCCPE10/9	9	60	0.75	436
	TCCPE10/12	12	80	0.91	608
	TCCPE10/19	19	80	1.05	909
	TCCPE10/25	25	80	1.18	1,166
	TCCPE10/37	37	80	1.40	1,677

NOTE: The data shown is approximate and subject to standard industry tolerances.
NOTE: #16 AWG per UL 66 Fixture Wire type FFH-2

servicewire.com
Phoenix, AZ 877-623-9473
Culloden, WV 800-624-3572
Houston, TX 800-231-9473

RETURN to Table of Contents

ServiceWire Co.
Manufacturing quality. Delivering service.
Made in the USA
ISO 9001:2008

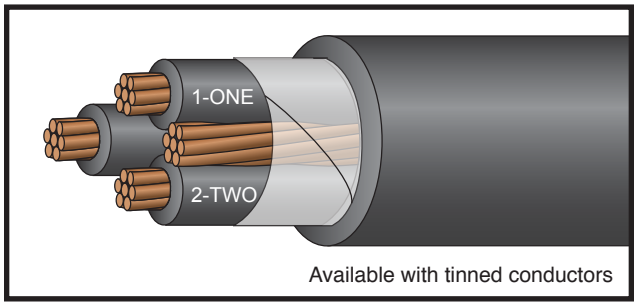

Available with tinned conductors

Tray Cable

XHHW-2/ServiceCPE® 600 Volt Copper

Description:
3 conductors, stranded, insulated with heat and moisture resistant crosslinked polyethylene (type XHHW-2) and phase identified. Cabled with fillers (when necessary) and bare copper ground conductor. Cable core covered with binder tape and overall black CPE jacket.

Application:
Suitable for use in hazardous locations:
- Class I - Div 2
- Class II - Div 2

Standards:
UL 1277
CSA C22.2 #230 TC
ICEA S-95-658/NEMA WC-70
Exposed Runs Rated (TC-ER)
IMSA 19-1
Flame Rated: IEEE 383 (70,000 BTU)
T-29-520 (210,000 BTU) (available upon request)
IEEE 1202/CSA FT-4 (available upon request)
Two-hour Firewall
Temperature Rated at 90°C Wet/Dry
Sunlight and Oil Resistant I Jacket
Direct Burial
Color Code: Method 4
K-2 (#14 AWG - #8 AWG) (optional color codes available)
RoHS Compliant

	Part Number	Size AWG or Kcmil	Strand (no.)	Insulation Thickness (mils)	Grounding Conductor (AWG)	Jacket Thickness (mils)	Approx. Diameter Overall (inch)	Approx. Net Weight (lb/1000')	Ampacity* (30°C ambient) 90°C Wet/Dry
THREE CONDUCTOR	TCCPE14/3G	14	7	30	14	45	0.38	95	25†
	TCCPE12/3G	12	7	30	12	45	0.42	133	30†
	TCCPE10/3G	10	7	30	10	45	0.47	188	40†
	TCCPE8/3G	8	7	45	10	60	0.62	292	55
	TCCPE6/3G	6	7	45	8	60	0.72	451	75
	TCCPE4/3G	4	7	45	8	80	0.87	666	95
	TCCPE3/3G	3	7	45	6	80	0.92	816	115
	TCCPE2/3G	2	7	45	6	80	0.99	973	130
	TCCPE1/3G	1	19	55	6	80	1.10	1,193	145
	TCCPE1/03G	1/0	19	55	6	80	1.19	1,447	170
	TCCPE2/03G	2/0	19	55	6	80	1.28	1,754	195
	TCCPE3/03G	3/0	19	55	4	80	1.39	2,179	225
	TCCPE4/03G	4/0	19	55	4	80	1.51	2,661	260
	TCCPE250/3G	250	37	65	4	110	1.75	3,206	290
	TCCPE350/3G	350	37	65	3	110	1.98	4,321	350
	TCCPE500/3G	500	37	65	2	110	2.23	5,944	430
	TCCPE600/3G	600	61	80	2	110	2.50	7,114	475
	TCCPE750/3G	750	61	80	1	110	2.71	8,740	535

*Per NEC Table 310.15 (B)(16).
†The overcurrent protection for items marked with an obelisk (†) shall not exceed 15 amps for #14 AWG, 20 amps for #12 AWG and 30 amps for #10 AWG per NEC 310-16 footnote.
NOTE: The data shown is approximate and subject to standard industry tolerances.

servicewire.com
Phoenix, AZ 877-623-9473
Culloden, WV 800-624-3572
Houston, TX 800-231-9473

RETURN to Table of Contents

ServiceWire Co.
Manufacturing quality. Delivering service.
Made in the USA
ISO 9001: 2008

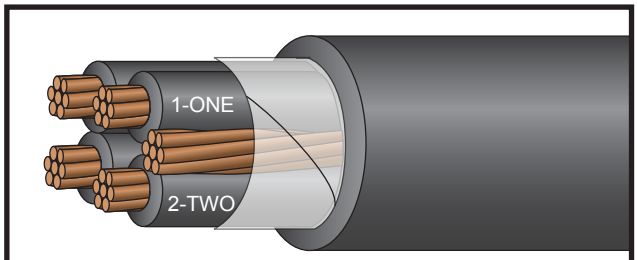

Available with tinned conductors

Tray Cable

XHHW-2/ServiceCPE®
600 Volt Copper

Description:
4 conductors, stranded, insulated with heat and moisture resistant crosslinked polyethylene (type XHHW-2) and phase identified. Cabled with fillers (when necessary) and bare copper ground conductor. Cable core covered with binder tape and overall black CPE jacket.

Application:
Suitable for use in hazardous locations:
- Class I - Div 2
- Class II - Div 2

Standards:
UL 1277
CSA C22.2 #230 TC
ICEA S-95-658/NEMA WC-70
Exposed Runs Rated (TC-ER)
IMSA 19-1
Flame Rated: IEEE 383 (70,000 BTU)
T-29-520 (210,000 BTU) (available upon request)
IEEE 1202/CSA FT-4 (available upon request)
Two-hour Firewall
Temperature Rated at 90°C Wet/Dry
Sunlight and Oil Resistant I Jacket
Direct Burial
Color Code: Method 4
K-2 (#14 AWG - #8 AWG) (optional color codes available)
RoHS Compliant

	Part Number	Size AWG or Kcmil	Strand (no.)	Insulation Thickness (mils)	Grounding Conductor (AWG)	Jacket Thickness (mils)	Approx. Diameter Overall (inch)	Approx. Net Weight (lb/1000')	Ampacity* (30°C ambient) 90°C Wet/Dry
FOUR CONDUCTOR	TCCPE14/4G	14	7	30	14	45	0.41	116	25†
	TCCPE12/4G	12	7	30	12	45	0.46	162	30†
	TCCPE10/4G	10	7	30	10	45	0.51	231	40†
	TCCPE8/4G	8	7	45	10	60	0.68	363	55
	TCCPE6/4G	6	7	45	8	60	0.79	560	75
	TCCPE4/4G	4	7	45	8	80	0.95	833	95
	TCCPE3/4G	3	7	45	6	80	1.01	1,021	115
	TCCPE2/4G	2	7	45	6	80	1.08	1,226	130
	TCCPE1/4G	1	19	55	6	80	1.21	1,512	145
	TCCPE1/04G	1/0	19	55	6	80	1.31	1,845	170
	TCCPE2/04G	2/0	19	55	6	80	1.42	2,248	195
	TCCPE3/04G	3/0	19	55	4	80	1.53	2,792	225
	TCCPE4/04G	4/0	19	55	4	110	1.73	3,520	260
	TCCPE250/4G	250	37	65	4	110	1.93	4,111	290
	TCCPE350/4G	350	37	65	3	110	2.19	5,565	350
	TCCPE500/4G	500	37	65	2	110	2.47	7,687	430
	TCCPE600/4G	600	61	80	2	140	2.83	9,373	475
	TCCPE750/4G	750	61	80	1	140	3.06	11,509	535

*Per NEC Table 310.15 (B)(16). 4-Conductor ampacity assumes three are hot and one is neutral.
†The overcurrent protection for items marked with an obelisk (†) shall not exceed 15 amps for #14 AWG, 20 amps for #12 AWG and 30 amps for #10 AWG per NEC 310-16 footnote.
NOTE: The data shown is approximate and subject to standard industry tolerances.

servicewire.com
Phoenix, AZ 877-623-9473
Culloden, WV 800-624-3572
Houston, TX 800-231-9473

RETURN to Table of Contents

ServiceWire Co.
Manufacturing quality. Delivering service.

FM TESTED · Made in the USA · ISO 9001:2008

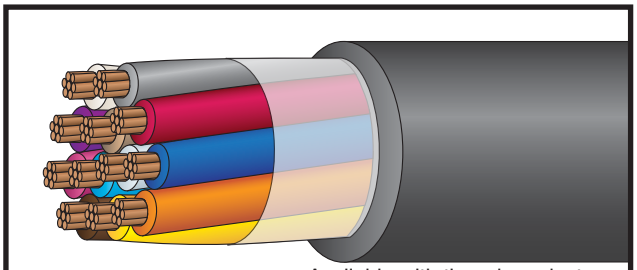

Available with tinned conductors

Tray Cable

XHHW-2/EnviroPlus®
Factory Mutual Group 1 Spec. Tested
Zero Halogen, Limited Smoke
600 Volt Copper

Description:
Conductors are stranded, annealed copper, insulated with heat and moisture resistant crosslinked polyethylene (type XHHW-2) and phase identified. Cabled with fillers (when necessary). Cable core is covered with binder tape and an overall black zero halogen, limited smoke, zero lead jacket.

Application:
Suitable for use in hazardous locations:
- Class I - Div 2
- Class II - Div 2

Standards:
UL1277
CSA C22.2 #239 CIC
ICEA S-95-658/NEMA WC-70
Exposed Runs Rated (TC-ER)
IMSA 19-1
Flame Rated: IEEE 383 (70,000 BTU)
IEEE 1202/CSA FT-4
UL1685 and UL 1581
Two-hour Firewall
Temperature Rated 90ºC Wet/Dry
Cold Temperature Rated at -40ºC
Sunlight Resistant
Direct Burial
Color Code: K-2 (optional color codes available)
Zero Halogen, Limited Smoke Jacket
RoHS Compliant

	Part Number	Number of Conductors	Overall Jacket (mils)	Nominal Diameter (inches)	Approx. Net Weight (lb/1000')	Ampacity* (30°C ambient) 90°C Wet/Dry
#14 AWG	TCNH14/2	2	45	0.39	70	25†
	TCNH14/3	3	45	0.41	90	25†
	TCNH14/4	4	45	0.45	111	20†
	TCNH14/5	5	45	0.48	133	20†
	TCNH14/7	7	60	0.55	189	17†
	TCNH14/9	9	60	0.64	236	17†
	TCNH14/12	12	60	0.71	299	12
	TCNH14/19	19	60	0.82	439	12
	TCNH14/37	37	80	1.12	841	10
#12 AWG	TCNH12/2	2	45	0.43	91	30†
	TCNH12/3	3	45	0.45	120	30†
	TCNH12/4	4	45	0.49	151	24†
	TCNH12/5	5	60	0.57	199	24†
	TCNH12/7	7	60	0.61	258	21†
	TCNH12/9	9	60	0.70	324	21†
	TCNH12/12	12	60	0.79	414	15
	TCNH12/19	19	80	0.95	656	15
	TCNH12/37	37	80	1.26	1,188	12
#10 AWG	TCNH10/2	2	45	0.48	122	40†
	TCNH10/3	3	45	0.50	164	40†
	TCNH10/4	4	60	0.58	225	32†
	TCNH10/5	5	60	0.63	271	32†
	TCNH10/7	7	60	0.68	357	28
	TCNH10/9	9	60	0.79	450	28
	TCNH10/12	12	80	0.92	618	20
	TCNH10/19	19	80	1.07	920	20
	TCNH10/37	37	80	1.42	1,692	16

*Per NEC Table 310.15 (B)(16). (Ampacity derated in accordance with note 8a.)
†The overcurrent protection for items marked with an (†) shall not exceed 15 amps for #14 AWG, and 20 amps for #12 AWG and 30 amps for #10 AWG per NEC 310-16 footnote.
NOTE: The data shown is approximate and subject to standard industry tolerances

servicewire.com
Phoenix, AZ 877-623-9473
Culloden, WV 800-624-3572
Houston, TX 800-231-9473

RETURN to Table of Contents

ServiceWire Co.
Manufacturing quality. Delivering service.

FM TESTED · Made in the USA · ISO 9001: 2008

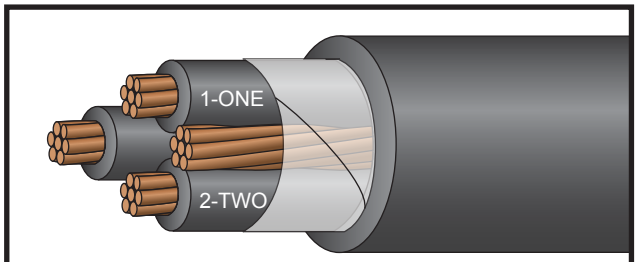

Available with tinned conductors

Tray Cable

XHHW-2/EnviroPlus®
Factory Mutual Group 1 Spec. Tested
Zero Halogen, Limited Smoke
600 Volt Copper

Description:
3 or 4 conductors, stranded copper, insulated with heat and moisture resistant crosslinked polyethylene (type XHHW-2) and phase identified. Cabled with fillers and bare copper ground conductor. Cable core is covered with binder tape and overall black zero halogen, limited smoke, zero lead jacket.

Application:
Suitable for use in hazardous locations:
- Class I - Div 2
- Class II - Div 2

Standards:
UL1277
CSA C22.2 #230 TC
ICEA S-95-658/NEMA WC-70
Exposed Runs Rated (TC-ER)
IMSA 19-1
Flame Rated: IEEE 383 (70,000 BTU)
IEEE 1202/CSA FT-4
UL1685 and UL 1581
Two-hour Firewall
Temperature Rated at 90ºC Wet/Dry
Cold Temperature Rated at -40ºC
Sunlight Resistant
Direct Burial
Color Code: Method 4 (except #8 AWG is K-2)
Zero Halogen, Limited Smoke Jacket
RoHS Compliant

	Part Number	Size AWG or Kcmil	Strand (no.)	Insulation Thickness (mils)	Grounding Conductor (AWG)	Jacket Thickness (mils)	Approx. Diameter Overall (inch)	Approx. Net Weight (lb/1000')	Ampacity* (30°C ambient) 90°C Wet/Dry
THREE CONDUCTOR	TCNH8/3G	8	7	45	10	60	0.66	305	55
	TCNH8/3GG	8	7	45	10	60	0.71	319	55
	TCNH6/3G	6	7	45	8	60	0.74	457	75
	TCNH6/3GG	6	7	45	8	60	0.81	489	75
	TCNH4/3G	4	7	45	8	80	0.89	675	95
	TCNH3/3G	3	7	45	6	80	0.94	827	115
	TCNH2/3G	2	7	45	6	80	1.00	984	130
	TCNH1/3G	1	19	55	6	80	1.11	1,205	145
	TCNH1/03G	1/0	19	55	6	80	1.20	1,495	170
	TCNH2/03G	2/0	19	55	6	80	1.30	1,768	195
	TCNH3/03G	3/0	19	55	4	80	1.40	2,194	225
	TCNH4/03G	4/0	19	55	4	80	1.53	2,676	260
	TCNH250/3G	250	37	65	4	110	1.77	3,231	290
	TCNH350/3G	350	37	65	3	110	1.99	4,349	350
	TCNH500/3G	500	37	65	2	110	2.25	5,976	430
	TCNH600/3G	600	61	80	2	110	2.51	7,149	475
	TCNH750/3G	750	61	80	1	140	2.78	8,946	535
FOUR CONDUCTOR	TCNH8/4G	8	7	45	10	60	0.72	378	55
	TCNH8/4GG	8	7	45	10	60	0.78	392	55
	TCNH6/4G	6	7	45	8	60	0.81	568	75
	TCNH6/4GG	6	7	45	8	80	0.92	640	75
	TCNH4/4G	4	7	45	8	80	0.97	845	95
	TCNH3/4G	3	7	45	6	80	1.03	1,035	115
	TCNH2/4G	2	7	45	6	80	1.10	1,240	130
	TCNH1/4G	1	19	55	6	80	1.22	1,528	145
	TCNH1/04G	1/0	19	55	6	80	1.32	1,862	170
	TCNH2/04G	2/0	19	55	6	80	1.43	2,265	195
	TCNH3/04G	3/0	19	55	4	80	1.55	2,811	225
	TCNH4/04G	4/0	19	55	4	110	1.75	3,549	260
	TCNH250/4G	250	37	65	4	110	1.95	4,145	290
	TCNH350/4G	350	37	65	3	110	2.20	5,602	350
	TCNH500/4G	500	37	65	2	140	2.49	7,729	430
	TCNH600/4G	600	61	80	2	140	2.84	9,434	475
	TCNH750/4G	750	61	80	1	140	3.08	11,575	535

*Per NEC Table 310.15 (B)(16). 4-Conductor ampacity assumes three are hot and one is neutral.
NOTE: The data shown is approximate and subject to standard industry tolerances.

servicewire.com
Phoenix, AZ 877-623-9473
Culloden, WV 800-624-3572
Houston, TX 800-231-9473

RETURN to Table of Contents

ServiceWire Co.
Manufacturing quality. Delivering service.

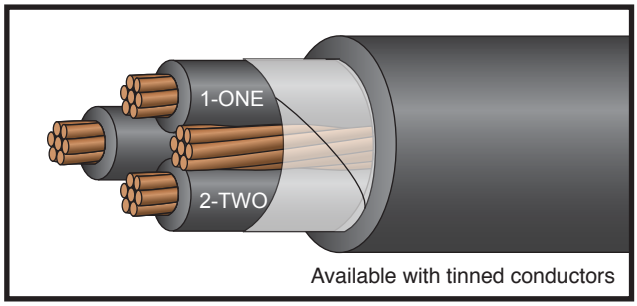

Available with tinned conductors

Tray Cable

XHHW-2/EnviroPlus®
50% Ground
Factory Mutual Group 1 Spec. Tested
Zero Halogen, Limited Smoke
600 Volt Copper

Description:
3 or 4 conductors, stranded copper, insulated with heat and moisture resistant crosslinked polyethylene (type XHHW-2) and phase identified. Cabled with fillers and bare copper ground conductor. Cable core is covered with binder tape and overall black zero halogen, limited smoke, zero lead jacket.

Application:
Suitable for use in hazardous locations:
- Class I - Div 2
- Class II - Div 2

Standards:
UL1277
CSA C22.2 #230 TC
ICEA S-95-658/NEMA WC-70
Exposed Runs Rated (TC-ER)
IMSA 19-1
Flame Rated: IEEE 383 (70,000 BTU)
IEEE 1202/CSA FT-4
UL1685 and UL 1581
Two-hour Firewall
Temperature Rated at 90°C Wet/Dry
Cold Temperature Rated at -40ºC
Sunlight Resistant
Direct Burial
Color Code: Method 4 (except #8 AWG is K-2)
Zero Halogen, Limited Smoke Jacket
RoHS Compliant

	Part Number	Size AWG or Kcmil	Strand (no.)	Insulation Thickness (mils)	Grounding Conductors (AWG)	Jacket Thickness (mils)	Approx. Diameter Overall (inch)	Approx. Net Weight (lb/1000')	Ampacity* (30°C ambient) 90°C Wet/Dry
THREE CONDUCTOR	TCNH8/3G3#14	8	7	45	3-#14	60	0.66	311	55
	TCNH6/3G3#12	6	7	45	3-#12	60	0.74	466	75
	TCNH4/3G3#10	4	7	45	3-#10	80	0.89	717	95
	TCNH2/3G3#8	2	7	45	3-#8	80	1.00	1,050	130
	TCNH1/3G3#8	1	19	55	3-#8	80	1.11	1,271	145
	TCNH1/03G3#6	1/0	19	55	3-#6	80	1.20	1,610	170
	TCNH2/03G3#6	2/0	19	55	3-#6	80	1.30	1,918	195
	TCNH3/03G3#4	3/0	19	55	3-#4	80	1.40	2,432	225
	TCNH4/03G3#4	4/0	19	55	3-#4	80	1.53	2,914	260
	TCNH250/3G3#4	250	37	65	3-#4	110	1.77	3,469	290
	TCNH350/3G3#2	350	37	65	3-#2	110	1.99	4,768	350
	TCNH500/3G3#1	500	37	65	3-#1	110	2.25	6,513	430
	TCNH750/3G3-2/0	750	61	80	3-2/0	140	2.78	9,858	535
FOUR CONDUCTOR	TCNH8/4G3#14	8	7	45	3-#14	60	0.72	384	55
	TCNH6/4G3#12	6	7	45	3-#12	60	0.81	577	75
	TCNH4/4G3#10	4	7	45	3-#10	80	0.97	887	95
	TCNH2/4G3#8	2	7	45	3-#8	80	1.10	1,306	130
	TCNH1/4G3#8	1	19	55	3-#8	80	1.22	1,594	145
	TCNH1/04G3#6	1/0	19	55	3-#6	80	1.32	2,011	170
	TCNH2/04G3#6	2/0	19	55	3-#6	80	1.43	2,415	195
	TCNH3/04G3#4	3/0	19	55	3-#4	80	1.55	3,049	225
	TCNH4/04G3#4	4/0	19	55	3-#4	110	1.75	3,787	260
	TCNH250/4G3#4	250	37	65	3-#4	110	1.95	4,382	290
	TCNH350/4G3#2	350	37	65	3-#2	110	2.20	6,020	350
	TCNH500/4G3#1	500	37	65	3-#1	110	2.49	8,266	430
	TCNH750/4G3-2/0	750	61	80	3-2/0	140	3.08	12,487	535

*Per NEC Table 310.15 (B)(16). 4-Conductor ampacity assumes three are hot and one is neutral.
NOTE: The data shown is approximate and subject to standard industry tolerances.

servicewire.com
Phoenix, AZ 877-623-9473
Culloden, WV 800-624-3572
Houston, TX 800-231-9473

ServiceWire Co.
Manufacturing quality. Delivering service.
Made in the USA
ISO 9001: 2008

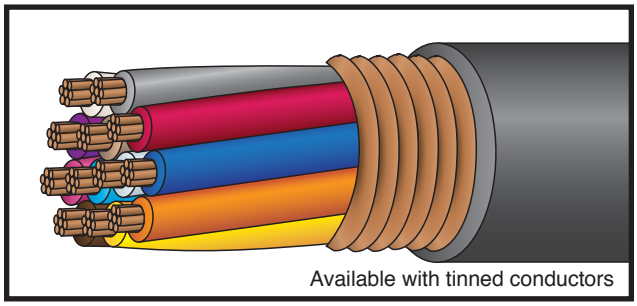
Available with tinned conductors

Tray Cable

XHHW-2/PVC Shielded 600 Volt Copper

Description:
Class B stranded, annealed copper conductors, insulated with heat and moisture resistant crosslinked polyethylene (type XHHW-2) and phase identified. Cabled with fillers (when necessary). Cable core covered with mylar binder tape, longitudinally applied corrugated copper tape shield and an overall black PVC jacket. **Jacket available in colors.**

Application:
Suitable for use in hazardous locations:
- Class I - Div 2
- Class II - Div 2

Standards:
UL 1277
CSA C22.2 #239 CIC
ICEA S-95-658/NEMA WC-70
Exposed Runs Rated (TC-ER)
IMSA 19-1
Flame Rated: IEEE 383 (70,000 BTU)
IEEE 1202/CSA FT-4
Two-hour Firewall
Temperature Rated at 90°C Wet/Dry
Sunlight and Oil Resistant II Jacket
Direct Burial
Color Code: K-2 (optional color codes available)
RoHS Compliant

	Part Number	Number of Conductors	Overall Jacket (mils)	Nominal Diameter (inches)	Approx. Net Weight (lb/1000')	Ampacity* (30°C ambient) 90°C Wet/Dry
#14 AWG	TCXHSHC14/2	2	45	0.45	107	25†
	TCXHSHC14/3	3	45	0.47	127	25†
	TCXHSHC14/4	4	45	0.50	151	20†
	TCXHSHC14/5	5	60	0.57	190	20†
	TCXHSHC14/7	7	60	0.61	237	17†
	TCXHSHC14/9	9	60	0.69	286	17†
	TCXHSHC14/12	12	60	0.76	353	12
	TCXHSHC14/19	19	80	0.91	536	12
#12 AWG	TCXHSHC12/2	2	45	0.48	128	30†
	TCXHSHC12/3	3	45	0.51	159	30†
	TCXHSHC12/4	4	60	0.58	209	24†
	TCXHSHC12/5	5	60	0.62	243	24†
	TCXHSHC12/7	7	60	0.67	305	21†
	TCXHSHC12/9	9	60	0.76	376	21†
	TCXHSHC12/12	12	80	0.88	503	15
	TCXHSHC12/19	19	80	1.01	722	15
#10 AWG	TCXHSHC10/2	2	60	0.56	176	40†
	TCXHSHC10/3	3	60	0.59	222	40†
	TCXHSHC10/4	4	60	0.63	270	32†
	TCXHSHC10/5	5	60	0.68	318	32†
	TCXHSHC10/7	7	60	0.73	409	28†
	TCXHSHC10/9	9	80	0.88	540	28†
	TCXHSHC10/12	12	80	0.98	685	20
	TCXHSHC10/19	19	80	1.12	994	20

*Per NEC Table 310.15 (B)(16) (Ampacity derated in accordance with note 8a).
†The overcurrent protection for items marked with an (†) shall not exceed 15 amps for #14 AWG, 20 amps for #12 AWG and 30 amps for #10 AWG per NEC 310-16 footnote.
NOTE: The data shown is approximate and subject to standard industry tolerances.

servicewire.com
Phoenix, AZ 877-623-9473
Culloden, WV 800-624-3572
Houston, TX 800-231-9473

RETURN to Table of Contents

ServiceWire Co.
Manufacturing quality. Delivering service.
Made in the USA
ISO 9001:2008

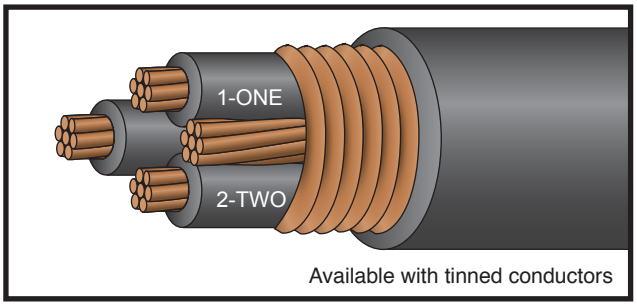

Available with tinned conductors

Tray Cable

XHHW-2/PVC Shielded 600 Volt Copper

Description:
3 or 4 conductors, stranded, insulated with heat and moisture resistant crosslinked polyethylene (type XHHW-2) and phase identified. Cabled with fillers (when necessary) and bare copper ground conductor. Cable core covered with mylar binder tape, longitudinally applied corrugated copper tape shield and overall black PVC jacket. **Jacket available in colors.**

Application:
Suitable for use in hazardous locations:
- Class I - Div 2
- Class II - Div 2

Standards:
UL1277
CSA C22.2 #230 TC
ICEA S-95-658/NEMA WC-70
Exposed Runs Rated (TC-ER)** (#4 AWG and larger)
IMSA 19-1
Flame Rated: IEEE 383 (70,000 BTU)
IEEE 1202/CSA FT-4
Two Hour Firewall
Temperature Rated at 90°C Wet/Dry
Sunlight and Oil Resistant II Jacket
Direct Burial
Color Code: Method 4
K-2 (#14 - #8 AWG)
RoHS Compliant

	Part Number	Size AWG or Kcmil	Strand (no.)	Insulation Thickness (mils)	Grounding Conductor (AWG)	PVC Jacket Thickness (mils)	Approx. Diameter Overall (inch)	Approx. Net Weight (lb/1000')	Ampacity* (30°C ambient) 90°C Wet/Dry
THREE CONDUCTOR	TCXHSHC14/3G	14	7	30	14	45	0.40	134	25†
	TCXHSHC12/3G	12	7	30	12	45	0.44	174	30†
	TCXHSHC10/3G	10	7	30	10	45	0.49	232	40†
	TCXHSHC8/3G	8	7	45	10	60	0.64	346	55
	TCXHSHC6/3G	6	7	45	8	60	0.72	504	75
	TCXHSHC4/3G	4	7	45	8	80	0.87	728	95
	TCXHSHC2/3G	2	7	45	6	80	0.99	1,043	130
	TCXHSHC1/3G	1	19	55	6	80	1.10	1,272	145
FOUR CONDUCTOR	TCXHSHC14/4G	14	7	30	14	45	0.43	157	25†
	TCXHSHC12/4G	12	7	30	12	45	0.48	207	30†
	TCXHSHC10/4G	10	7	30	10	60	0.56	294	40†
	TCXHSHC8/4G	8	7	45	10	60	0.70	424	55
	TCXHSHC6/4G	6	7	45	8	60	0.79	617	75
	TCXHSHC4/4G	4	7	45	8	80	0.95	901	95
	TCXHSHC2/4G	2	7	45	6	80	1.09	1,306	130

*Per NEC Table 310.15 (B)(16). 4-Conductor ampacity assumes three are hot and one is neutral. **ER Rated #6 AWG and smaller with green ground or with no ground.
†The overcurrent protection for items marked with an obelisk (†) shall not exceed 15 amps for #14 AWG, 20 amps for #12 AWG and 30 amps for #10 AWG per NEC 310-16 footnote.
NOTE: The data shown is approximate and subject to standard industry tolerances.

servicewire.com
Phoenix, AZ 877-623-9473
Culloden, WV 800-624-3572
Houston, TX 800-231-9473

RETURN to Table of Contents

ServiceWire Co.
Manufacturing quality. Delivering service.
Made in the USA
ISO 9001: 2008

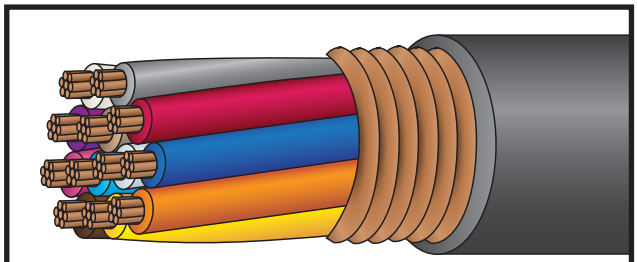

Available with tinned conductors

Tray Cable

XHHW-2/ServiceCPE® Shielded 600 Volt Copper

Description:

Conductors are stranded, annealed copper, insulated with heat and moisture resistant crosslinked polyethylene (type XHHW-2) and phase identified. Cabled with fillers (when necessary). Cable core is covered with binder tape, longitudinally applied corrugated copper tape shield and an overall black CPE jacket.

Application:

Suitable for use in hazardous locations:
- Class I - Div 2
- Class II - Div 2

Standards:

UL1277
CSA C22.2 #239 CIC
ICEA S-95-658/NEMA WC-70
Exposed Runs Rated (TC-ER)
IMSA 19-1
Flame Rated: IEEE 383 (70,000 BTU)
IEEE 1202/CSA FT-4
UL 1581
Two-hour Firewall
Temperature Rated at 90°C Wet/Dry
Sunlight and Oil Resistant I Jacket
Direct Burial
Color Code: K-2 (optional color codes available)
RoHS Compliant

	Part Number	Number of Conductors	Overall Jacket (mils)	Nominal Diameter (inches)	Approx. Net Weight (lb/1000')	Ampacity* (30°C ambient) 90°C Wet/Dry
#14 AWG	TCCPESHC14/2	2	45	0.45	107	25†
	TCCPESHC14/3	3	45	0.47	127	25†
	TCCPESHC14/4	4	45	0.50	151	20†
	TCCPESHC14/5	5	60	0.57	191	20†
	TCCPESHC14/7	7	60	0.61	235	17†
	TCCPESHC14/9	9	60	0.69	287	17†
	TCCPESHC14/12	12	60	0.76	352	12
	TCCPESHC14/19	19	80	0.91	538	12
#12 AWG	TCCPESHC12/2	2	45	0.48	128	30†
	TCCPESHC12/3	3	45	0.51	160	30†
	TCCPESHC12/4	4	60	0.58	209	24†
	TCCPESHC12/5	5	60	0.62	244	24†
	TCCPESHC12/7	7	60	0.67	306	21†
	TCCPESHC12/9	9	60	0.76	377	21†
	TCCPESHC12/12	12	80	0.88	505	15
	TCCPESHC12/19	19	80	1.01	724	15
#10 AWG	TCCPESHC10/2	2	60	0.56	176	40†
	TCCPESHC10/3	3	60	0.59	222	40†
	TCCPESHC10/4	4	60	0.63	270	32†
	TCCPESHC10/5	5	60	0.68	318	32†
	TCCPESHC10/7	7	60	0.73	409	28†
	TCCPESHC10/9	9	80	0.88	540	28†
	TCCPESHC10/12	12	80	0.98	685	20
	TCCPESHC10/19	19	80	1.12	994	20

*Per NEC Table 310.15 (B)(16) (Ampacity derated in accordance with note 8a).
†The overcurrent protection for items marked with an (†) shall not exceed 15 amps for #14 AWG, 20 amps for #12 AWG and 30 amps for #10 AWG per NEC 310-16 footnote.
NOTE: The data shown is approximate and subject to standard industry tolerances.

servicewire.com
Phoenix, AZ 877-623-9473
Culloden, WV 800-624-3572
Houston, TX 800-231-9473

RETURN to Table of Contents

ServiceWire Co.
Manufacturing quality. Delivering service.
Made in the USA
ISO 9001:2008

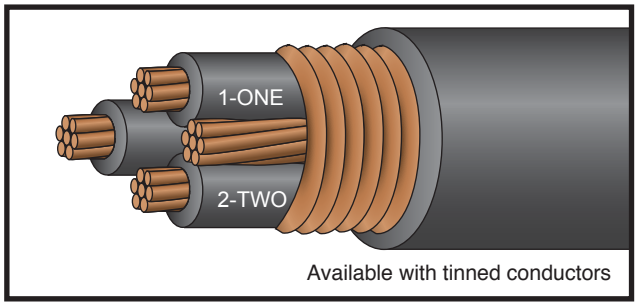

Available with tinned conductors

Tray Cable

XHHW-2/ServiceCPE® Shielded 600 Volt Copper

Description:
3 or 4 stranded copper conductors, insulated with heat and moisture resistant crosslinked polyethylene (type XHHW-2) and phase identified. Cabled with fillers and bare copper ground conductor. Cable core is covered with binder tape, longitudinally applied corrugated copper tape shield, and overall black CPE jacket.

Application:
Suitable for use in hazardous locations:
- Class I - Div 2
- Class II - Div 2

Standards:
UL1277
CSA C22.2 #230 TC
ICEA S-95-658/NEMA WC-70
Exposed Runs Rated (TC-ER)
IMSA 19-1
Flame Rated: IEEE 383 (70,000 BTU)
IEEE 1202/CSA FT-4
UL1685 and UL 1581
Two-hour Firewall
Temperature Rated at 90ºC Wet/Dry
Sunlight and Oil Resistant I Jacket
Direct Burial
Color Code: Method 4
K-2 (#14 AWG - #8 AWG)
RoHS Compliant

	Part Number	Size AWG	Strand (no.)	Insulation Thickness (mils)	Grounding Conductor (AWG)	Jacket Thickness (mils)	Approx. Diameter Overall (inch)	Approx. Net Weight (lb/1000')	Ampacity* (30°C ambient) 90°C Wet/Dry
THREE CONDUCTOR	TCCPESHC14/3G	14	7	30	14	45	0.40	134	25†
	TCCPESHC12/3G	12	7	30	12	45	0.44	175	30†
	TCCPESHC10/3G	10	7	30	10	45	0.49	233	40†
	TCCPESHC8/3G	8	7	45	10	60	0.64	347	55
	TCCPESHC6/3G	6	7	45	8	60	0.72	505	75
	TCCPESHC4/3G	4	7	45	8	80	0.87	729	95
	TCCPESHC2/3G	2	7	45	6	80	0.99	1,045	130
	TCCPESHC1/3G	1	19	55	6	80	1.10	1,274	145
FOUR CONDUCTOR	TCCPESHC14/4G	14	7	30	14	45	0.43	158	25†
	TCCPESHC12/4G	12	7	30	12	45	0.48	208	30†
	TCCPESHC10/4G	10	7	30	10	60	0.56	295	40†
	TCCPESHC8/4G	8	7	45	10	60	0.70	426	55
	TCCPESHC6/4G	6	7	45	8	60	0.79	618	75
	TCCPESHC4/4G	4	7	45	8	80	0.95	903	95
	TCCPESHC2/4G	2	7	45	6	80	1.08	1,309	130

*Per NEC Table 310.15 (B)(16). 4-Conductor ampacity assumes three are hot and one is neutral.
†The overcurrent protection for items marked with an obelisk (†) shall not exceed 15 amps for #14 AWG, 20 amps for #12 AWG and 30 amps for #10 AWG per NEC 310-16 footnote.
NOTE: The data shown is approximate and subject to standard industry tolerances.

servicewire.com
Phoenix, AZ 877-623-9473
Culloden, WV 800-624-3572
Houston, TX 800-231-9473

RETURN to Table of Contents

ServiceWire Co.
Manufacturing quality. Delivering service.

FM TESTED · Made in the USA · ISO 9001: 2008

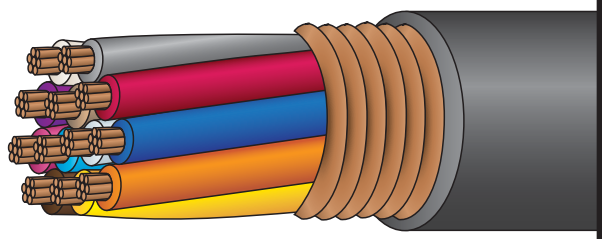

Available with tinned conductors

Tray Cable

XHHW-2/EnviroPlus® Shielded Factory Mutual Group 1 Spec. Tested Zero Halogen, Limited Smoke 600 Volt Copper

Description:

Conductors are stranded, annealed copper, insulated with heat and moisture resistant crosslinked polyethylene (type XHHW-2) and phase identified. Cabled with fillers (when necessary). Cable core is covered with binder tape, longitudinally applied corrugated copper tape shield and an overall black zero halogen, limited smoke, zero lead jacket.

Application:

Suitable for use in hazardous locations:
- Class I - Div 2
- Class II - Div 2

Standards:

UL1277
CSA C22.2 #239 CIC
ICEA S-95-658/NEMA WC-70
Exposed Runs Rated (TC-ER)
IMSA 19-1
Flame Rated: IEEE 383 (70,000 BTU)
IEEE 1202/CSA FT-4
UL1685 and UL 1581
Two-hour Firewall
Temperature Rated at 90°C Wet/Dry
Cold Temperature Rated at -40°C
Sunlight Resistant
Direct Burial
Color Code: K-2 (optional color codes available)
Zero Halogen, Limited Smoke Jacket
RoHS Compliant

	Part Number	Number of Conductors	Overall Jacket (mils)	Nominal Diameter (inches)	Approx. Net Weight (lb/1000')	Ampacity* (30°C ambient) 90°C Wet/Dry
#14 AWG	TCNHSHC14/2	2	45	0.45	110	25†
	TCNHSHC14/3	3	45	0.47	130	25†
	TCNHSHC14/4	4	45	0.50	154	20†
	TCNHSHC14/5	5	60	0.57	195	20†
	TCNHSHC14/7	7	60	0.61	239	17†
	TCNHSHC14/9	9	60	0.69	292	17†
	TCNHSHC14/12	12	60	0.76	358	12
	TCNHSHC14/19	19	80	0.91	547	12
#12 AWG	TCNHSHC12/2	2	45	0.48	131	30†
	TCNHSHC12/3	3	45	0.51	163	30†
	TCNHSHC12/4	4	60	0.58	214	24†
	TCNHSHC12/5	5	60	0.62	249	24†
	TCNHSHC12/7	7	60	0.67	311	21†
	TCNHSHC12/9	9	60	0.76	382	21†
	TCNHSHC12/12	12	80	0.88	514	15
	TCNHSHC12/19	19	80	1.01	734	15
#10 AWG	TCNHSHC10/2	2	60	0.56	181	40†
	TCNHSHC10/3	3	60	0.59	227	40†
	TCNHSHC10/4	4	60	0.63	275	32†
	TCNHSHC10/5	5	60	0.68	324	32†
	TCNHSHC10/7	7	60	0.73	416	28†
	TCNHSHC10/9	9	80	0.88	550	28†
	TCNHSHC10/12	12	80	0.98	696	20
	TCNHSHC10/19	19	80	1.12	1,007	20

*Per NEC Table 310.15 (B)(16) (Ampacity derated in accordance with note 8a).
†The overcurrent protection for items marked with an (†) shall not exceed 15 amps for #14 AWG, 20 amps for #12 AWG and 30 amps for #10 AWG per NEC 310-16 footnote.
NOTE: The data shown is approximate and subject to standard industry tolerances.

servicewire.com
Phoenix, AZ 877-623-9473
Culloden, WV 800-624-3572
Houston, TX 800-231-9473

RETURN to Table of Contents

ServiceWire Co.
Manufacturing quality. Delivering service.

FM TESTED · Made in the USA · ISO 9001:2008

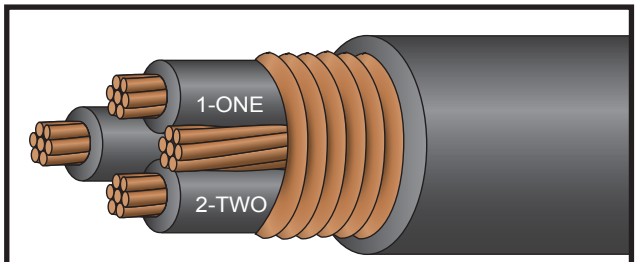

Available with tinned conductors

Tray Cable

XHHW-2/EnviroPlus® Shielded Factory Mutual Group 1 Spec. Tested Zero Halogen, Limited Smoke 600 Volt Copper

Description:
3 or 4 conductors, stranded copper, insulated with heat and moisture resistant crosslinked polyethylene (type XHHW-2) and phase identified. Cabled with fillers and bare copper ground conductor. Cable core is covered with binder tape, longitudinally applied corrugated copper tape shield and overall black zero halogen, limited smoke, zero lead jacket.

Application:
Suitable for use in hazardous locations:
- Class I - Div 2
- Class II - Div 2

Standards:
UL1277
CSA C22.2 #230 TC
ICEA S-95-658/NEMA WC-70
Exposed Runs Rated (TC-ER)
IMSA 19-1
Flame Rated: IEEE 383 (70,000 BTU)
IEEE 1202/CSA FT-4
UL1685 and UL 1581
Two-hour Firewall
Temperature Rated at 90°C Wet/Dry
Cold Temperature Rated at -40°C
Sunlight Resistant
Direct Burial
Color Code: Method 4
K-2 (#14 AWG - #8 AWG)
Zero Halogen, Limited Smoke Jacket
RoHS Compliant

	Part Number	Size AWG	Strand (no.)	Insulation Thickness (mils)	Grounding Conductor (AWG)	PVC Jacket Thickness (mils)	Approx. Diameter Overall (inch)	Approx. Net Weight (lb/1000')	Ampacity* (30°C ambient) 90°C Wet/Dry
THREE CONDUCTOR	TCNHSHC14/3G	14	7	30	14	45	0.40	136	25†
	TCNHSHC12/3G	12	7	30	12	45	0.44	177	30†
	TCNHSHC10/3G	10	7	30	10	45	0.49	235	40†
	TCNHSHC8/3G	8	7	45	10	60	0.64	352	55
	TCNHSHC6/3G	6	7	45	8	60	0.72	510	75
	TCNHSHC4/3G	4	7	45	8	80	0.87	738	95
	TCNHSHC2/3G	2	7	45	6	80	0.99	1,055	130
	TCNHSHC1/3G	1	19	55	6	80	1.10	1,285	145
FOUR CONDUCTOR	TCNHSHC14/4G	14	7	30	14	45	0.43	160	25†
	TCNHSHC12/4G	12	7	30	12	45	0.48	210	30†
	TCNHSHC10/4G	10	7	30	10	60	0.56	299	40†
	TCNHSHC8/4G	8	7	45	10	60	0.70	431	55
	TCNHSHC6/4G	6	7	45	8	60	0.79	624	75
	TCNHSHC4/4G	4	7	45	8	80	0.95	912	95
	TCNHSHC2/4G	2	7	45	6	80	1.08	1,320	130

*Per NEC Table 310.15 (B)(16). 4-Conductor ampacity assumes three are hot and one is neutral.
†The overcurrent protection for items marked with an obelisk (†) shall not exceed 15 amps for #14 AWG, 20 amps for #12 AWG and 30 amps for #10 AWG per NEC 310-16 footnote.
NOTE: The data shown is approximate and subject to standard industry tolerances.

servicewire.com
Phoenix, AZ 877-623-9473
Culloden, WV 800-624-3572
Houston, TX 800-231-9473

RETURN to Table of Contents

ServiceWire Co.
Manufacturing quality. Delivering service.
Made in the USA
ISO 9001: 2008

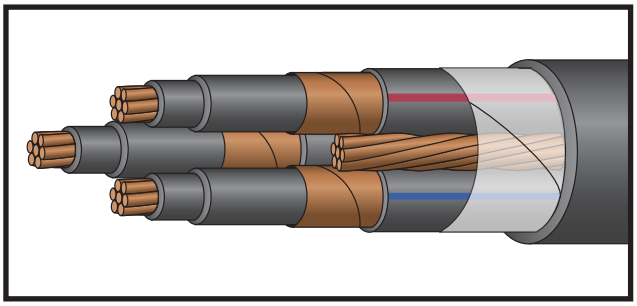

Tray Cable

Nonshielded (100%)/Shielded (133%) MV-90/MV-105 2,400/5,000 Volt Copper

Description:

Nonshielded: Class B stranded copper and extruded conductor shield, insulated with heat and moisture resistant EPR (2,400 Volt rated).
Shielded: Class B stranded copper and extruded semi-conductor shield, insulated with heat and moisture resistant EPR (5,000 volt rated – 133% insulation level; 8,000 volt rated – 100% insulation level) with conductor jacket (PVC, CPE, etc.) 3 phase identified conductors, cabled with fillers and bare copper ground conductor. Cable core covered with binder tape and overall black PVC jacket.
Jacket available in colors.

Standards:

UL 1072
Non-shielded: ICEA S-96-659/NEMA WC-71
Shielded: ICEA S-93-639/NEMA WC-74
Conductors Rated at 105°C (5kV)/90°C (2.4kV)
Sunlight and Oil Resistant II Jacket
Direct Burial
Color Code: K-2 Stripes
RoHS Compliant

	Part Number	Size AWG or Kcmil	Strand (no.)	Conductor		Approx. Diameter Over Single Cond. (inch)	Grounding Conductor (AWG)	PVC Jacket Thickness (mils)	Approx. Diameter Overall (inch)	Approx. Net Weight (lb/1000')	Ampacity* (40°C ambient)
				Insulation Thickness (mils)	Jacket Thickness (mils)						
NON-SHIELDED	P2.4K8/3EG	8	7	125	80	0.58	8	80	1.45	944	58
	P2.4K6/3EG	6	7	125	80	0.62	6	80	1.54	1,125	77
	P2.4K4/3EG	4	7	125	80	0.67	6	80	1.64	1,363	100
	P2.4K2/3EG	2	7	125	80	0.73	6	110	1.83	1,805	135
	P2.4K1/03EG	1/0	19	125	80	0.80	4	110	1.98	2,379	155
	P2.4K2/03EG	2/0	19	125	80	0.85	4	110	2.09	2,737	260
	P2.4K4/03EG	4/0	19	125	95	1.01	3	110	2.44	4,063	285
	P2.4K250/3EG	250	37	140	110	1.09	3	110	2.61	4,572	315
	P2.4K350/3EG	350	37	140	110	1.19	2	140	2.88	5,970	390
	P2.4K500/3EG	500	37	140	110	1.32	1	140	3.16	7,785	475
	P2.4K750/3EG	750	61	155	125	1.56	1/0	140	3.68	11,106	585
SHIELDED	P5KS6/3EG	6	7	115	60	0.67	6	80	1.64	1,378	77
	P5KS4/3EG	4	7	115	60	0.73	6	110	1.83	1,775	100
	P5KS2/3EG	2	7	115	60	0.78	6	110	1.94	2,115	135
	P5KS1/3EG	1	19	115	60	0.82	4	110	2.03	2,491	155
	P5KS1/03EG	1/0	19	115	80	0.91	4	110	2.22	2,908	185
	P5KS2/03EG	2/0	19	115	80	0.96	4	110	2.33	3,301	210
	P5KS4/03EG	4/0	19	115	80	1.05	3	110	2.52	4,324	285
	P5KS250/3EG	250	37	115	80	1.11	3	110	2.65	4,872	315
	P5KS350/3EG	350	37	115	80	1.21	2	140	2.93	6,289	390
	P5KS500/3EG	500	37	115	80	1.36	1	140	3.25	8,244	475
	P5KS750/3EG	750	61	115	80	1.55	1/0	140	3.66	11,350	585

*Per NEC Table 310.60 (C)(75). Based on one three-conductor cable.
NOTE: The data shown is approximate and subject to standard industry tolerances.

servicewire.com
Phoenix, AZ 877-623-9473
Culloden, WV 800-624-3572
Houston, TX 800-231-9473

RETURN to Table of Contents

ServiceWire Co.
Manufacturing quality. Delivering service.
Made in the USA
ISO 9001:2008

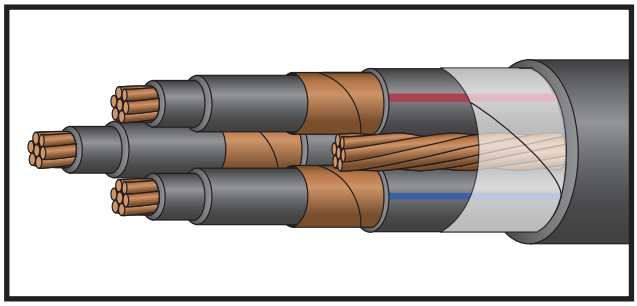

Tray Cable

133% Jacketed EPR
MV-105 15,000 Volt Copper

Description:
Class B stranded copper, extruded semi-conductor shield, insulated with heat and moisture resistant EPR (133% insulation level), with conductor jacket (PVC, CPE, etc.). Phase identified and cabled with fillers and bare copper ground conductor. Cable core covered with binder tape and overall black PVC jacket.
Jacket available in colors.

Standards:
UL 1072
ICEA S-93-639/NEMA WC-74
Temperature Rated at 105°C Wet/Dry (conductors)
Sunlight and Oil Resistant II Jacket
Direct Burial
Color Code: K-2 Stripes
RoHS Compliant

Part Number	Size AWG or Kcmil	Strand (no.)	Conductor		Approx. Diameter Over Single Cond. (inch)	Grounding Conductor (AWG)	PVC Jacket Thickness (mils)	Approx. Diameter Overall (inch)	Approx. Net Weight (lb/1000')	Ampacity* (40°C ambient)
			Insulation Thickness (mils)	Jacket Thickness (mils)						
P15K2/3EG	2	7	220	80	1.04	6	110	2.50	3,058	165
P15K1/3EG	1	19	220	80	1.08	4	110	2.59	3,381	185
P15K1/03EG	1/0	19	220	80	1.13	4	110	2.70	3,779	215
P15K2/03EG	2/0	19	220	80	1.18	4	140	2.86	4,385	245
P15K4/03EG	4/0	19	220	80	1.26	3	140	3.04	5,389	320
P15K250/3EG	250	37	220	80	1.34	3	140	3.21	6,090	350
P15K350/3EG	350	37	220	80	1.44	2	140	3.42	7,433	430
P15K500/3EG	500	37	220	80	1.57	1	140	3.70	9,393	525
P15K750/3EG	750	61	220	110	1.82	1/0	140	4.24	13,020	635

*Per NEC Table 310.60 (C)(75). Based on one three-conductor cable.
NOTE: The data shown is approximate and subject to standard industry tolerances.

servicewire.com
Phoenix, AZ 877-623-9473
Culloden, WV 800-624-3572
Houston, TX 800-231-9473

RETURN to Table of Contents

ServiceWire Co.
Manufacturing quality. Delivering service.

Made in the USA

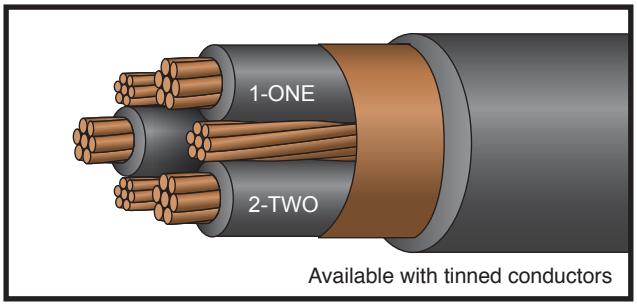

Available with tinned conductors

Tray Cable ServiceDrive® ASD/VFD

XHHW-2/PVC Shielded (Patented) *600 Volt Copper*

Description:
3 conductors, stranded, insulated with heat and moisture resistant crosslinked polyethylene (type XHHW-2), phase identified and cabled with suitable fillers and 3 symmetrical bare copper ground conductors. Cable core covered with 5-mil helical copper tape shield, and overall black PVC jacket. **Jacket available in colors.**

Application:
For use in ASD/VFD applications.
Suitable for use in hazardous locations:
- Class I - Div 2
- Class II - Div 2
- Class III - Div 1 and 2

Standards:
UL 1277
CSA C22.2 #230 TC
ICEA S-95-658/NEMA WC-70
Exposed Runs Rated (TC-ER) (#4 AWG and larger)
Flame Rated: IEEE 383 (70,000 BTU)
ICEA T-29-520 (210,000 BTU) (1/0 AWG and larger)
IEEE 1202/CSA FT-4
Two-hour Firewall
Temperature Rated at 90°C Wet/Dry
Sunlight and Oil Resistant II Jacket
Direct Burial
Code: Method 4
RoHS Compliant

	Part Number	Size AWG or Kcmil	Strand (no.)	Insulation Thickness (mils)	Grounding Conductors (AWG)	PVC Jacket Thickness (mils)	Approx. Diameter Overall (inch)	Approx. Net Weight (lb/1000')	Ampacity* (30°C ambient) 90°C Wet/Dry
THREE CONDUCTOR	ASDPTC14/3	14	7	45	3-#10	60	0.57	274	25†
	ASDPTC12/3	12	7	45	3-#10	60	0.59	305	30†
	ASDPTC10/3	10	7	45	3-#10	60	0.62	351	40†
	ASDPTC8/3	8	7	45	3-#10	60	0.64	415	55
	ASDPTC6/3	6	7	45	3-#10	60	0.72	539	75
	ASDPTC4/3	4	7	45	3-#10	80	0.87	762	95
	ASDPTC3/3	3	7	45	3-#10	80	0.92	889	115
	ASDPTC2/3	2	7	45	3-#8	80	0.98	1,103	130
	ASDPTC1/3	1	19	55	3-#8	80	1.09	1,332	145
	ASDPTC1/03	1/0	19	55	3-#6	80	1.18	1,677	170
	ASDPTC2/03	2/0	19	55	3-#6	80	1.28	1,991	195
	ASDPTC3/03	3/0	19	55	3-#4	80	1.38	2,513	225
	ASDPTC4/03	4/0	19	55	3-#4	80	1.51	3,004	260
	ASDPTC250/3	250	37	65	3-#4	110	1.75	3,562	290
	ASDPTC350/3	350	37	65	3-#2	110	1.97	4,876	350
	ASDPTC500/3	500	37	65	3-#1	110	2.23	6,638	430
	ASDPTC600/3	600	61	80	3-1/0	110	2.49	8,018	475
	ASDPTC750/3	750	61	80	3-2/0	110	2.70	9,846	535

*Per NEC Table 310.15 (B)(16).
†The overcurrent protection for items marked with an obelisk (†) shall not exceed 15 amps for #14 AWG, 20 amps for #12 AWG, and 30 amps for #10 AWG per NEC 310.15 (B)(16) footnote.
Note: The data shown is approximate and subject to standard industry tolerances.

servicewire.com
Phoenix, AZ 877-623-9473
Culloden, WV 800-624-3572
Houston, TX 800-231-9473

RETURN to Table of Contents

ServiceWire Co.
Manufacturing quality. Delivering service.

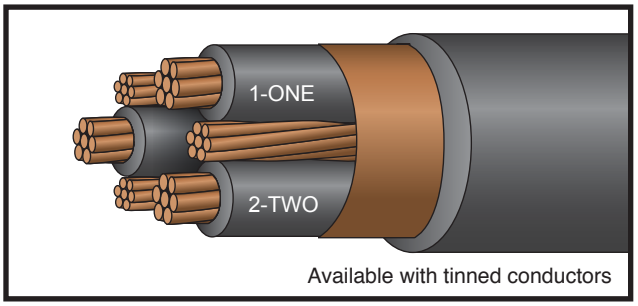

Available with tinned conductors

Tray Cable ServiceDrive Plus® ASD/VFD

XHHW-2/EnviroPlus® Shielded (Patented) Factory Mutual Group 1 Spec. Tested Zero Halogen, Limited Smoke, Lead Free 600 Volt Copper

Description:
3 conductors, stranded, insulated with heat and moisture resistant crosslinked polyethylene (type XHHW-2), phase identified and cabled with suitable fillers and 3 symmetrical bare copper ground conductors. Cable core covered with 5-mil helical copper tape shield and overall black zero halogen, limited smoke, zero lead jacket.

Application:
For use in ASD/VFD applications.
Suitable for use in hazardous locations:
- Class I - Div 2
- Class II - Div 2
- Class III - Div 1 and 2

Standards:
UL 1277
CSA C22.2 #230 TC
ICEA S-95-658/NEMA WC-70
Exposed Runs Rated (TC-ER)
Flame Rated: IEEE 383 (70,000 BTU)
IEEE 1202/CSA FT-4
UL 1685
Two-hour Firewall
Temperature Rated at 90°C Wet/Dry
Cold Temperature Rated at -40ºC
Sunlight Resistant
Direct Burial
Color Code: Method 4
Zero Halogen, Limited Smoke Jacket
RoHS Compliant

	Part Number	Size AWG or Kcmil	Strand (no.)	Insulation Thickness (mils)	Grounding Conductors (AWG)	Jacket Thickness (mils)	Approx. Diameter Overall (inch)	Approx. Net Weight (lb/1000')	Ampacity* (30°C ambient) 90°C Wet/Dry
THREE CONDUCTOR	ASDETC14/3	14	7	45	3-#10	60	0.57	279	25†
	ASDETC12/3	12	7	45	3-#10	60	0.59	311	30†
	ASDETC10/3	10	7	45	3-#10	60	0.62	357	40†
	ASDETC8/3	8	7	45	3-#10	60	0.64	420	55
	ASDETC6/3	6	7	45	3-#10	60	0.72	546	75
	ASDETC4/3	4	7	45	3-#10	80	0.87	772	95
	ASDETC3/3	3	7	45	3-#10	80	0.92	900	115
	ASDETC2/3	2	7	45	3-#8	80	0.98	1,115	130
	ASDETC1/3	1	19	55	3-#8	80	1.09	1,345	145
	ASDETC1/03	1/0	19	55	3-#6	80	1.18	1,691	170
	ASDETC2/03	2/0	19	55	3-#6	80	1.28	2,007	195
	ASDETC3/03	3/0	19	55	3-#4	80	1.38	2,530	225
	ASDETC4/03	4/0	19	55	3-#4	80	1.51	3,023	260
	ASDETC250/3	250	37	65	3-#4	110	1.75	3,592	290
	ASDETC350/3	350	37	65	3-#2	110	1.97	4,910	350
	ASDETC500/3	500	37	65	3-#1	110	2.23	6,677	430
	ASDETC600/3	600	61	80	3-1/0	110	2.49	8,060	475
	ASDETC750/3	750	61	80	3-2/0	110	2.70	9,893	535

*Per NEC Table 310.15 (B)(16).
†The overcurrent protection for items marked with an obelisk (†) shall not exceed 15 amps for #14 AWG , 20 amps for #12 AWG, and 30 amps for #10 AWG per NEC 310.15 (B)(16) footnote.
Note: The data shown is approximate and subject to standard industry tolerances.

servicewire.com
Phoenix, AZ 877-623-9473
Culloden, WV 800-624-3572
Houston, TX 800-231-9473

RETURN to Table of Contents

ServiceWire Co.
Manufacturing quality. Delivering service.
Made in the USA
ISO 9001: 2008

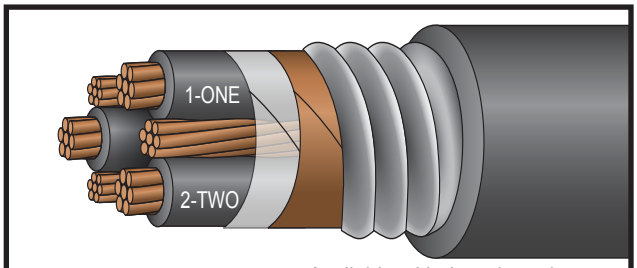

Available with tinned conductors

Jacketed MC ServiceDrive® ASD/VFD

XHHW-2 (Patented)
600 Volt Copper

Description:
3 conductors, stranded, insulated with heat and moisture resistant crosslinked polyethylene (type XHHW-2), phase identified and cabled with suitable fillers and 3 symmetrical copper ground conductors. Cable core covered with binder tape, 5-mil helical copper tape shield and galvanized steel interlocked armor with overall PVC jacket.
Jacket available in colors.

Application:
For use in ASD/VFD applications.
Suitable for use in hazardous locations:
- Class I - Div 2
- Class II - Div 2
- Class III - Div 1 and 2

Standards:
UL 1569
ICEA S-95-658/NEMA WC-70
Flame Rated: IEEE 383 (70,000 BTU)
ICEA T-29-520 (210,000 BTU)
IEEE 1202/CSA FT-4
Two-hour Firewall
Temperature Rated at 90°C Wet/Dry
Sunlight and Oil Resistant II Jacket
Direct Burial[1]
Color Code: Method 4
RoHS Compliant

	Part Number	Size AWG or Kcmil	Strand (no.)	Insulation Thickness (mils)	Grounding Conductors (AWG)	Diameter over Armor (inch)	PVC Jacket Thickness (mils)	Approx. Diameter Overall (inch)	Approx. Net Weight (lb/1000')	Ampacity* (30°C ambient) 90°C Wet/Dry
THREE CONDUCTOR	ASDP14/3	14	7	45	3-#14	0.57	50	0.67	336	25†
	ASDP12/3	12	7	45	3-#14	0.63	50	0.73	394	30†
	ASDP10/3	10	7	45	3-#14	0.67	50	0.77	458	40†
	ASDP8/3	8	7	45	3-#14	0.73	50	0.83	556	55
	ASDP6/3	6	7	45	3-#12	0.81	50	0.91	725	75
	ASDP4/3	4	7	45	3-#10	0.91	50	1.01	977	95
	ASDP3/3	3	7	45	3-#10	0.97	50	1.07	1,120	115
	ASDP2/3	2	7	45	3-#8	1.03	50	1.13	1,348	130
	ASDP1/3	1	19	55	3-#8	1.15	50	1.25	1,607	145
	ASDP1/03	1/0	19	55	3-#6	1.31	50	1.41	2,089	170
	ASDP2/03	2/0	19	55	3-#6	1.41	50	1.51	2,436	195
	ASDP3/03	3/0	19	55	3-#4	1.51	60	1.63	3,023	225
	ASDP4/03	4/0	19	55	3-#4	1.63	60	1.75	3,553	260
	ASDP250/3	250	37	65	3-#4	1.81	60	1.93	4,072	290
	ASDP350/3	350	37	65	3-#2	2.03	60	2.15	5,447	350
	ASDP500/3	500	37	65	3-#1	2.29	75	2.44	7,346	430
	ASDP600/3	600	61	80	3-1/0	2.55	75	2.70	8,799	475
	ASDP750/3	750	61	80	3-2/0	2.77	75	2.92	10,692	535

*Per NEC Table 310.15 (B)(16). [1]Includes encasement in concrete.
†The overcurrent protection for items marked with an obelisk (†) shall not exceed 15 amps for #14 AWG, 20 amps for #12 AWG, and 30 amps for #10 AWG per NEC 310.15 (B)(16) footnote.
Note: The data shown is approximate and subject to standard industry tolerances.

servicewire.com
Phoenix, AZ 877-623-9473
Culloden, WV 800-624-3572
Houston, TX 800-231-9473

RETURN to Table of Contents

ServiceWire Co.
Manufacturing quality. Delivering service.

FM TESTED · Made in the USA · ISO 9001:2008

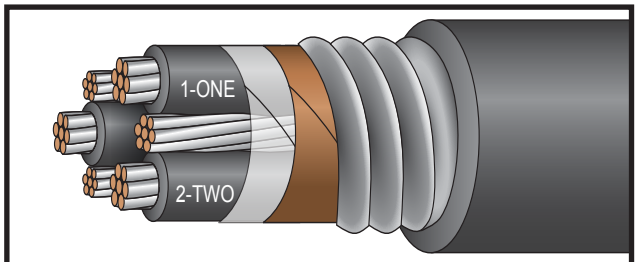

Available with bare conductors

Jacketed MC ServiceDrive Plus® ASD/VFD

XHHW-2
Factory Mutual Group 1 Spec. Tested
Zero Halogen, Limited Smoke (Patented)
600 Volt Copper

Description:
3 tinned conductors, stranded, insulated with heat and moisture resistant crosslinked polyethylene (type XHHW-2), phase identified and cabled with suitable fillers and 3 symmetrical tinned bare copper ground conductors. Cable core covered with binder tape, 5-mil helical copper tape shield, aluminum or galvanized steel interlocked armor with overall black zero halogen, limited smoke, zero lead jacket.

Application:
For use in ASD/VFD applications.
Suitable for use in hazardous locations:
- Class I - Div 2
- Class II - Div 2
- Class III - Div 1 and 2

Standards:
UL 1569
ICEA S-95-658/NEMA WC-70
Flame Rated: IEEE 383 (70,000 BTU)
IEEE 1202/CSA FT-4
UL 1685
Two-hour Firewall
Temperature Rated at 90°C Wet/Dry
Cold Temperature Rated at -40°C
Sunlight Resistant
Direct Burial[1]
Color Code: Method 4
Zero Halogen, Limited Smoke Jacket
RoHS Compliant

	Part Number	Size AWG or Kcmil	Strand (no.)	Insulation Thickness (mils)	Grounding Conductors (AWG)	Diameter over Armor (inch)	Jacket Thickness (mils)	Approx. Diameter Overall (inch)	Approx. Net Weight (lb/1000')	Ampacity* (30°C ambient) 90°C Wet/Dry
THREE CONDUCTOR	ASDE14/3T	14	7	45	3-#14	0.57	50	0.67	341	25†
	ASDE12/3T	12	7	45	3-#14	0.63	50	0.73	400	30†
	ASDE10/3T	10	7	45	3-#14	0.67	50	0.77	463	40†
	ASDE8/3T	8	7	45	3-#14	0.73	50	0.83	562	55
	ASDE6/3T	6	7	45	3-#12	0.81	50	0.91	732	75
	ASDE4/3T	4	7	45	3-#10	0.91	50	1.01	984	95
	ASDE3/3T	3	7	45	3-#10	0.97	50	1.07	1,128	115
	ASDE2/3T	2	7	45	3-#8	1.03	50	1.13	1,357	130
	ASDE1/3T	1	19	55	3-#8	1.15	50	1.25	1,617	145
	ASDE1/03T	1/0	19	55	3-#6	1.31	50	1.41	2,100	170
	ASDE2/03T	2/0	19	55	3-#6	1.41	50	1.51	2,448	195
	ASDE3/03T	3/0	19	55	3-#4	1.51	60	1.63	3,038	225
	ASDE4/03T	4/0	19	55	3-#4	1.63	60	1.75	3,569	260
	ASDE250/3T	250	37	65	3-#4	1.81	60	1.93	4,091	290
	ASDE350/3T	350	37	65	3-#2	2.03	60	2.15	5,467	350
	ASDE500/3T	500	37	65	3-#1	2.29	75	2.44	7,375	430
	ASDE600/3T	600	61	80	3-1/0	2.55	75	2.70	8,831	475
	ASDE750/3T	750	61	80	3-2/0	2.77	75	2.92	10,727	535

*Per NEC Table 310.15 (B)(16). [1]Includes encasement in concrete. **Fillers used when required.
†The overcurrent protection for items marked with an obelisk (†) shall not exceed 15 amps for #14 AWG, 20 amps for #12 AWG, and 30 amps for #10 AWG per NEC 310.15 (B)(16)footnote.
Note: The data shown is approximate and subject to standard industry tolerances.

servicewire.com
Phoenix, AZ 877-623-9473
Culloden, WV 800-624-3572
Houston, TX 800-231-9473

ServiceWire Co.
Manufacturing quality. Delivering service.

Tray Cable Termination Kit/Connectors ServiceDrive® and ServiceDrive Plus® ASD/VFD

Corresponding Part Numbers

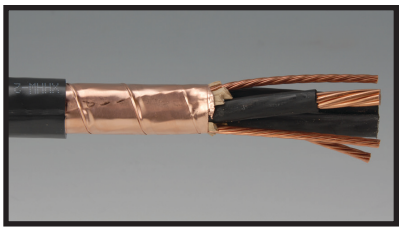
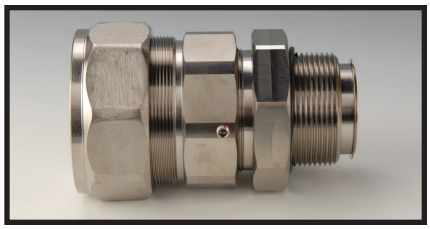
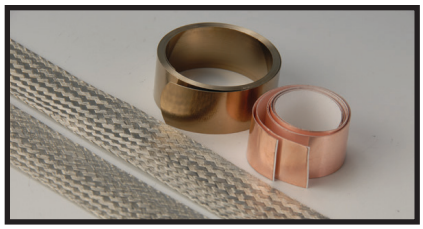

Size AWG or Kcmil	Cable Part Number	Connector Part Number	Termination Kit Part Number
14	ASDPTC14/3	CONASDTC14/3	TERASD14-1/3
12	ASDPTC12/3	CONASDTC12/3	TERASD14-1/3
10	ASDPTC10/3	CONASDTC10/3	TERASD14-1/3
8	ASDPTC8/3	CONASDTC8/3	TERASD14-1/3
6	ASDPTC6/3	CONASDTC6/3	TERASD14-1/3
4	ASDPTC4/3	CONASDTC4/3	TERASD14-1/3
3	ASDPTC3/3	CONASTCD3/3	TERASD14-1/3
2	ASDPTC2/3	CONASDTC2/3	TERASD14-1/3
1	ASDPTC1/3	CONASDTC1/3	TERASD14-1/3
1/0	ASDPTC1/03	CONASDTC1/03	TERASD1/0-3/03
2/0	ASDPTC2/03	CONASDTC2/03	TERASD1/0-3/03
3/0	ASDPTC3/03	CONASDTC3/03	TERASD1/0-3/03
4/0	ASDPTC4/03	CONASDTC4/03	TERASD4/0-400/3
250	ASDPTC250/3	CONASDTC250/3	TERASD4/0-400/3
350	ASDPTC350/3	CONASDTC350/3	TERASD4/0-400/3
500	ASDPTC500/3	CONASDTC500/3	TERASD500-750/3
600	ASDPTC600/3	CONASDTC600/3	TERASD500-750/3
750	ASDPTC750/3	CONASDTC750/3	TERASD500-750/3

servicewire.com
Phoenix, AZ 877-623-9473
Culloden, WV 800-624-3572
Houston, TX 800-231-9473

RETURN to Table of Contents

ServiceWire Co.
Manufacturing quality. Delivering service.
Made in the USA
ISO 9001:2008

Jacketed MC Termination Kit/Connectors ServiceDrive® and ServiceDrive Plus® ASD/VFD

Corresponding Part Numbers

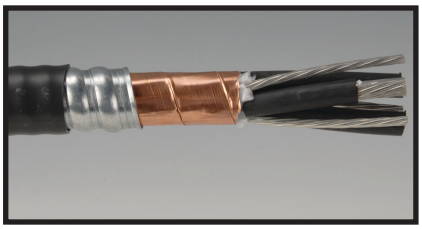
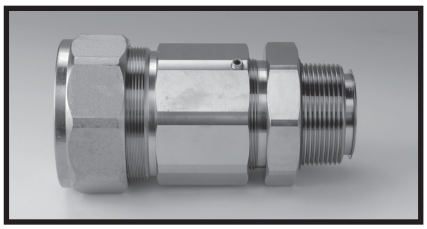
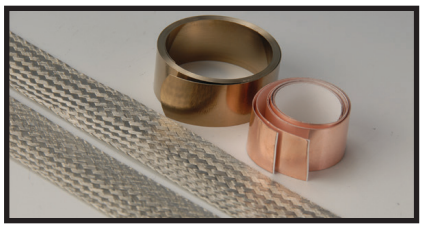

Size AWG or Kcmil	Cable Part Number	Connector Part Number	Termination Kit Part Number
14	ASDE14/3	CONASD14/3	TERASD14-1/3
12	ASDE12/3	CONASD12/3	TERASD14-1/3
10	ASDE10/3	CONASD10/3	TERASD14-1/3
8	ASDE8/3	CONASD8/3	TERASD14-1/3
6	ASDE6/3	CONASD6/3	TERASD14-1/3
4	ASDE4/3	CONASD4/3	TERASD14-1/3
3	ASDE3/3	CONASD3/3	TERASD14-1/3
2	ASDE2/3	CONASD2/3	TERASD14-1/3
1	ASDE1/3	CONASD1/3	TERASD14-1/3
1/0	ASDE1/03	CONASD1/03	TERASD1/0-3/03
2/0	ASDE2/03	CONASD2/03	TERASD1/0-3/03
3/0	ASDE3/03	CONASD3/03	TERASD1/0-3/03
4/0	ASDE4/03	CONASD4/03	TERASD4/0-400/3
250	ASDE250/3	CONASD250/3	TERASD4/0-400/3
350	ASDE350/3	CONASD350/3	TERASD4/0-400/3
500	ASDE500/3	CONASD500/3	TERASD500-750/3
600	ASDE600/3	CONASD600/3	TERASD500-750/3
750	ASDE750/3	CONASD750/3	TERASD500-750/3

servicewire.com
Phoenix, AZ 877-623-9473
Culloden, WV 800-624-3572
Houston, TX 800-231-9473

RETURN to Table of Contents

ServiceWire Co.
Manufacturing quality. Delivering service.

Made in the USA

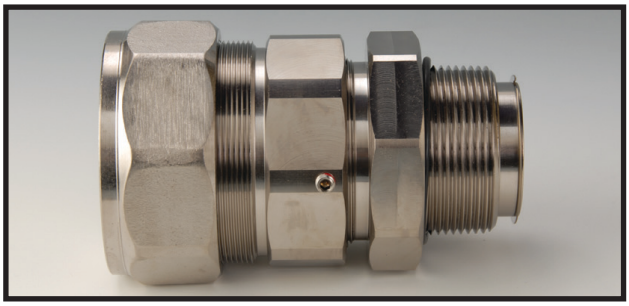

Tray Cable Connectors ServiceDrive® ASD/VFD

Patented for use with ServiceDrive® and ServiceDrive Plus® Cable Systems

Description:
Patented connectors are designed exclusively to terminate ASD/VFD cables in control centers, panel boards, junction boxes and motor control enclosures.

Listings:
Class I - Div 2
Class II - Div 1 and 2
CSA Standard: C22.2 #18.98
NEMA 4
IP65
Thread Type: NPT

Part Number	Wire Size	Hub Size	Set Screw Size
CONASDTC14/3	14 AWG 3 COND	3/4”	10/32 X 1/4”
CONASDTC12/3	12 AWG 3 COND	3/4”	10/32 X 1/4”
CONASDTC10/3	10 AWG 3 COND	3/4”	10/32 X 1/4”
CONASDTC8/3	8 AWG 3 COND	3/4”	10/32 X 1/4”
CONASDTC6/3	6 AWG 3 COND	3/4”	10/32 X 1/4
CONASDTC4/3	4 AWG 3 COND	1 ”	1/4-20 X 1/4”
CONASDTC3/3	3 AWG 3 COND	1 ”	1/4-20 X 1/4”
CONASDTC2/3	2 AWG 3 COND	1-1/4”	1/4-20 X 1/4”
CONASDTC1/3	1 AWG 3 COND	1-1/4”	1/4-20 X 1/4”
CONASDTC1/03	1/0 AWG 3 COND	1-1/2”	1/4-20 X 1/4”
CONASDTC2/03	2/0 AWG 3 COND	1-1/2”	1/4-20 X 1/4”
CONASDTC3/03	3/0 AWG 3 COND	1-1/2”	1/4-20 X 1/4”
CONASDTC4/03	4/0 AWG 3 COND	1-1/2”	1/4-20 X 5/16”
CONASDTC250/3	250 Kcmil 3 COND	2”	1/4-20 X 5/16”
CONASDTC300/3	300 Kcmil 3 COND	2”	5/16-18 X 3/8”
CONASDTC350/3	350 Kcmil 3 COND	2”	5/16-18 X 3/8”
CONASDTC400/3	400 Kcmil 3 COND	2”	5/16-18 X 3/8”
CONASDTC500/3	500 Kcmil 3 COND	2-1/2”	5/16-18 X 3/8”
CONASDTC600/3	600 Kcmil 3 COND	2-1/2”	5/16-18 X 3/8”
CONASDTC750/3	750 Kcmil 3 COND	3”	5/16-18 X 3/8”

servicewire.com
Phoenix, AZ 877-623-9473
Culloden, WV 800-624-3572
Houston, TX 800-231-9473

RETURN to Table of Contents

ServiceWire Co.
Manufacturing quality. Delivering service.
Made in the USA
ISO 9001: 2008

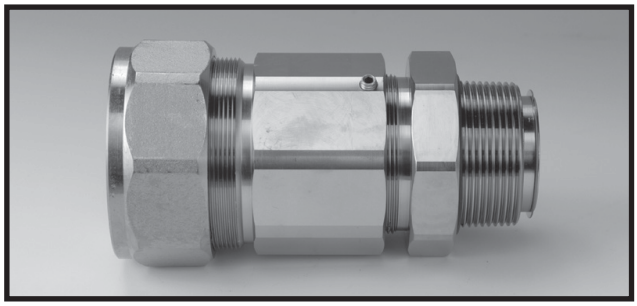

Jacketed MC Connectors ServiceDrive® ASD/VFD

Patented for use with ServiceDrive® and ServiceDrive Plus® Cable Systems

Description:
Patented connectors are designed exclusively to terminate ASD/VFD cables in control centers, panel boards, junction boxes and motor control enclosures.

Listings:
Class I - Div 2
Class II - Div 1 and 2
CSA Standard: C22.2 #18.98
NEMA 4
IP65
Thread Type: NPT

Part Number	Wire Size	Hub Size	Set Screw Size
CONASD14/3	14 AWG 3 COND	3/4”	10/32 X 1/4”
CONASD12/3	12 AWG 3 COND	3/4”	10/32 X 1/4”
CONASD10/3	10 AWG 3 COND	3/4”	10/32 X 1/4”
CONASD8/3	8 AWG 3 COND	3/4”	10/32 X 1/4”
CONASD6/3	6 AWG 3 COND	1-1/4”	1/4-20 X 1/4”
CONASD4/3	4 AWG 3 COND	1-1/4”	1/4-20 X 1/4”
CONASD3/3	3 AWG 3 COND	1-1/4”	1/4-20 X 1/4”
CONASD2/3	2 AWG 3 COND	1-1/4”	1/4-20 X 1/4”
CONASD1/3	1 AWG 3 COND	1-1/4”	1/4-20 X 1/4”
CONASD1/03	1/0 AWG 3 COND	1-1/2”	1/4-20 X 1/4”
CONASD2/03	2/0 AWG 3 COND	1-1/2”	1/4-20 X 1/4”
CONASD3/03	3/0 AWG 3 COND	1-1/2”	1/4-20 X 1/4”
CONASD4/03	4/0 AWG 3 COND	2”	1/4-20 X 5/16”
CONASD250/3	250 Kcmil 3 COND	2”	1/4-20 X 5/16”
CONASD300/3	300 Kcmil 3 COND	2”	1/4-20 X 5/16”
CONASD350/3	350 Kcmil 3 COND	2-1/2”	5/16-18 X 3/8”
CONASD400/3	400 Kcmil 3 COND	2-1/2”	5/16-18 X 3/8”
CONASD500/3	500 Kcmil 3 COND	2-1/2”	5/16-18 X 3/8”
CONASD600/3	600 Kcmil 3 COND	3”	5/16-18 X 3/8”
CONASD750/3	750 Kcmil 3 COND	3”	5/16-18 X 3/8”

servicewire.com
Phoenix, AZ 877-623-9473
Culloden, WV 800-624-3572
Houston, TX 800-231-9473

RETURN to Table of Contents

ServiceWire Co.
Manufacturing quality. Delivering service.

Made in the USA

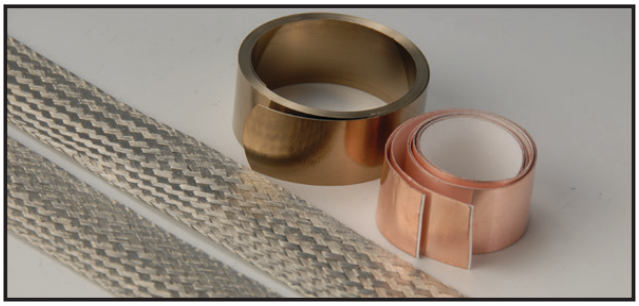

ASD/VFD Termination Kit

For use with ServiceDrive® and ServiceDrive Plus® (Armor and Tray) Cable Systems

Description:
Flat tinned copper braid with woven tinned copper construction, stainless steel spring clamp and adhesive-backed copper foil tape (shields against EMI/RFI radiation), which is conductive through the adhesive.

Application:
Used to properly terminate the helically applied copper tape shield of ASD/VFD cable constructions.

Listings:
ASTM Standards:
B-33 (tinned soft or annealed)
Braid: QC-W-343 Type S
Copper Foil Tape: UL 510 for Flame Retardancy

Part Number	Description
TERASD14-1/3	For use with #14 AWG - #1 AWG shielded armor and tray cable
TERASD1/0-3/03	For use with 1/0 AWG - 3/0 AWG shielded armor and tray cable
TERASD4/0-400/3	For use with 4/0 AWG - 400 Kcmil shielded armor and tray cable
TERASD500-750/3	For use with 500 Kcmil - 750 Kcmil shielded armor and tray cable

servicewire.com
Phoenix, AZ 877-623-9473
Culloden, WV 800-624-3572
Houston, TX 800-231-9473

RETURN to Table of Contents

ServiceWire Co.
Manufacturing quality. Delivering service.
Made in the USA
ISO 9001:2008

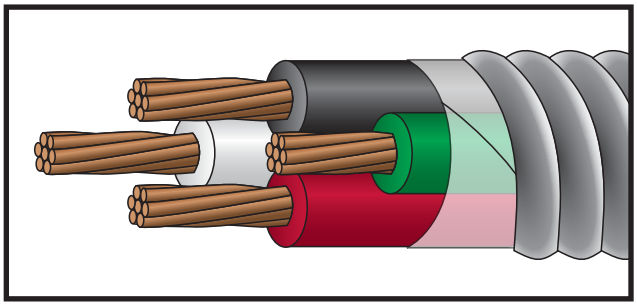

Feeder MC

XHHW-2
600 Volt Copper

Description:
3 or 4 conductors, stranded, insulated with heat and moisture resistant crosslinked polyethylene (type XHHW-2), phase identified and cabled with suitable fillers** and green or bare ground conductor. Cable core covered with binder tape and aluminum or galvanized steel interlocked armor. Jacket available upon request.

Application:
Cost effective replacement for conduit and wire; for service, branch and feeder circuits; and commercial, industrial & utility applications.

For use in theatres (article 520), motion picture and TV studios (article 530) and places of assembly with more than 100 people.

Suitable for use in hazardous locations:
Class I - Div 2
Class II - Div 2

Standards:
UL 1569
ICEA S-95-658/NEMA WC-70
Cable Tray Rated
NEC Article 330 (can be messenger supported)
Flame Rated: Two-hour Firewall
Temperature Rated at 90°C Wet/Dry
Color Code: 3 Conductor - Black, Red and White (#8 AWG - #1 AWG)
Method 4 (1/0 AWG and larger)
Green Ground (#8 AWG - #1 AWG)
Bare Ground (1/0 AWG and larger)
RoHS Compliant

	Part Number	Size AWG or Kcmil	Strand (no.)	Insulation Thickness (mils)	Insulated/Bare Grounding Conductor (AWG)	Diameter Over Armor (inch)	Approx. Net Weight (lb/1000')		Ampacity* (30°C ambient) 90°C Wet/Dry
							Alum. Armor	Galv. Armor	
TWO	MC8/2	8	7	45	10	0.71	259	337	55
TWO	MC6/2	6	7	45	8	0.81	366	465	75
THREE CONDUCTOR	MC8/3	8	7	45	10	0.81	339	434	55
THREE CONDUCTOR	MC6/3	6	7	45	8	0.95	480	607	75
THREE CONDUCTOR	MC4/3	4	7	45	8	1.01	659	786	95
THREE CONDUCTOR	MC3/3	3	7	45	6	1.09	808	960	115
THREE CONDUCTOR	MC2/3	2	7	45	6	1.15	960	1,109	130
THREE CONDUCTOR	MC1/3	1	19	55	6	1.27	1,190	1,423	145
THREE CONDUCTOR	MC1/03	1/0	19	55	6	1.31	1,409	1,647	170
THREE CONDUCTOR	MC2/03	2/0	19	55	6	1.37	1,697	1,965	195
THREE CONDUCTOR	MC3/03	3/0	19	55	4	1.51	2,118	2,410	225
THREE CONDUCTOR	MC4/03	4/0	19	55	4	1.63	2,577	2,897	260
THREE CONDUCTOR	MC250/3	250	37	65	4	1.81	3,107	3,468	290
THREE CONDUCTOR	MC300/3	300	37	65	3	1.93	3,674	4,063	320
THREE CONDUCTOR	MC350/3	350	37	65	3	2.03	4,201	4,621	350
THREE CONDUCTOR	MC400/3	400	37	65	3	2.13	4,724	5,167	380
THREE CONDUCTOR	MC500/3	500	37	65	2	2.29	5,798	6,269	430
THREE CONDUCTOR	MC600/3	600	61	80	2	2.55	6,936	7,468	475
THREE CONDUCTOR	MC750/3	750	61	80	1	2.77	8,537	9,128	535

*Per NEC Table 310.15 (B)(16). **Fillers used when required.
NOTE: The data shown is approximate and subject to standard industry tolerances.

servicewire.com
Phoenix, AZ 877-623-9473
Culloden, WV 800-624-3572
Houston, TX 800-231-9473

RETURN to Table of Contents

ServiceWire Co.
Manufacturing quality. Delivering service.
Made in the USA
ISO 9001: 2008

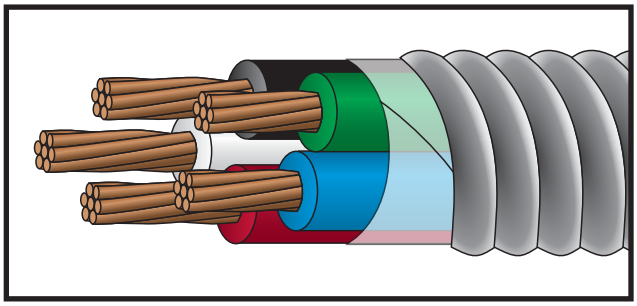

Feeder MC

XHHW-2
600 Volt Copper

Description:
3 or 4 conductors, stranded, insulated with heat and moisture resistant crosslinked polyethylene (type XHHW-2), phase identified and cabled with suitable fillers** and green or bare ground conductor. Cable core covered with binder tape and aluminum or galvanized steel interlocked armor. Jacket available upon request.

Application:
Cost effective replacement for conduit and wire; for service, branch and feeder circuits; and commercial, industrial and utility applications.

For use in theatres (article 520), motion picture and TV studios (article 530) and places of assembly with more than 100 people

Suitable for use in hazardous locations:
Class I - Div 2
Class II - Div 2

Standards:
UL 1569
ICEA S-95-658/NEMA WC-70
Cable Tray Rated
NEC Article 330 (can be messenger supported)
Flame Rated: Two-hour Firewall
Temperature Rated at 90°C Wet/Dry
Color Code: 4 Conductor - Black, Red, Blue and White (#8 AWG - #1 AWG)
Method 4 (1/0 AWG and larger)
Green Ground (#8 AWG - #1 AWG)
Bare Ground (1/0 AWG and larger)
RoHS Compliant

	Part Number	Size AWG or Kcmil	Strand (no.)	Insulation Thickness (mils)	Insulated/Bare Grounding Conductor (AWG)	Diameter Over Armor (inch)	Approx. Net Weight (lb/1000')		Ampacity* (30°C ambient) 90°C Wet/Dry
							Alum. Armor	Galv. Armor	
FOUR CONDUCTOR	MC8/4	8	7	45	10	0.89	416	517	55
	MC6/4	6	7	45	8	1.03	591	730	75
	MC4/4	4	7	45	8	1.11	823	968	95
	MC3/4	3	7	45	6	1.23	1,010	1,172	115
	MC2/4	2	7	45	6	1.33	1,237	1,491	130
	MC1/4	1	19	55	6	1.43	1,507	1,783	145
	MC1/04	1/0	19	55	6	1.43	1,805	2,078	170
	MC2/04	2/0	19	55	6	1.51	2,189	2,489	195
	MC3/04	3/0	19	55	4	1.65	2,725	3,049	225
	MC4/04	4/0	19	55	4	1.79	3,333	3,698	260
	MC250/4	250	37	65	4	1.99	4,008	4,410	290
	MC300/4	300	37	65	3	2.13	4,744	5,188	320
	MC350/4	350	37	65	3	2.25	5,439	5,910	350
	MC400/4	400	37	65	3	2.35	6,127	6,613	380
	MC500/4	500	37	65	2	2.53	7,531	8,066	430
	MC600/4	600	61	80	2	2.85	9,030	9,639	475
	MC750/4	750	61	80	1	3.05	11,118	11,773	535

*Per NEC Table 310.15 (B)(16). 4-Conductor ampacity assumes three are hot and one is neutral. **Fillers used when required.
NOTE: The data shown is approximate and subject to standard industry tolerances.

servicewire.com
Phoenix, AZ 877-623-9473
Culloden, WV 800-624-3572
Houston, TX 800-231-9473

RETURN to Table of Contents

ServiceWire Co.
Manufacturing quality. Delivering service.
Made in the USA
ISO 9001: 2008

Feeder MC Connectors

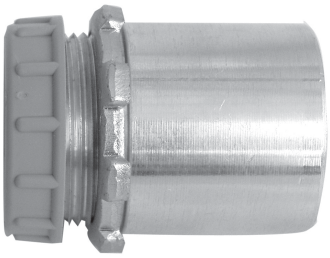

Description:
Connectors are a one-piece body construction with a unique scroll design that can provide a 360º ground to armor. Provides fast and easy installation, eliminates internal components, prevents cable pullout and saves time and labor.

Application:
Suitable for industrial and commercial use.
Manufactured from 6061 copper-free aluminum.
A complete range of NPT (National Pipe Thread) sizes are available from 1/2" through 4".

Listings:
UL: Class II and III – All Divisions

Copper MC	Part Number	O.D. Range	Copper MC	Part Number	O.D. Range	Copper MC	Part Number	O.D. Range
MC 8/3	CON83	0.760 - 0.830	MC 2/4	CON139	1.320 - 1.390	MC 250/4	CON202	1.930 - 2.020
MC 8/4	CON90	0.830 - 0.900	MC 1/3	CON132	1.250 - 1.320	MC 350/3	CON213	2.020 - 2.130
MC 6/2	CON83	0.760 - 0.830	MC 1/4	CON148	1.390 - 1.480	MC 350/4	CON235	2.240 - 2.350
MC 6/3	CON97	0.900 - 0.970	MC 1/03	CON132	1.250 - 1.320	MC 400/3	CON224	2.130 - 2.240
MC 6/4	CON104	0.970 - 1.040	MC 1/04	CON148	1.390 - 1.480	MC 400/4	CON246	2.350 - 2.460
MC 4/2	CON90	0.830 - 0.900	MC 2/03	CON148	1.390 - 1.480	MC 500/3	CON235	2.240 - 2.350
MC 4/3	CON104	0.970 - 1.040	MC 2/04	CON157	1.480 - 1.570	MC 500/4	CON271	2.570 - 2.710
MC 4/4	CON118	1.110 - 1.180	MC 3/03	CON157	1.480 - 1.570	MC 600/3	CON271	2.570 - 2.710
MC 3/3	CON111	1.040 - 1.110	MC 3/04	CON175	1.660 - 1.750	MC 600/4	CON299	2.850 - 2.990
MC 3/4	CON125	1.180 - 1.250	MC 4/03	CON166	1.570 - 1.660	MC 750/3	CON299	2.850 - 2.990
MC 2/3	CON118	1.110 - 1.180	MC 4/04	CON184	1.750 - 1.840	MC 750/4	CON313	2.990 - 3.130
			MC 250/3	CON184	1.750 - 1.840			

servicewire.com
Phoenix, AZ 877-623-9473
Culloden, WV 800-624-3572
Houston, TX 800-231-9473

RETURN to Table of Contents

ServiceWire Co.
Manufacturing quality. Delivering service.
Made in the USA
ISO 9001: 2008

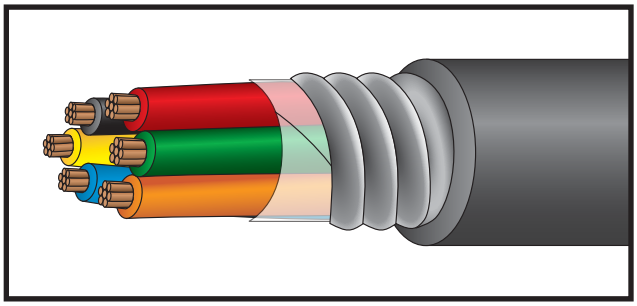

Jacketed MC

XHHW-2
600 Volt Copper

Description:
Class B stranded copper, insulated with heat and moisture resistant crosslinked polyethylene (type XHHW-2), phase identified and cabled with a **bare copper ground conductor. Cable core covered with binder tape and aluminum or galvanized steel interlocked armor, with an overall PVC jacket. **Jacket available in colors.**

Application:
Suitable for use in hazardous locations:
- Class I - Div 2
- Class II - Div 2

Standards:
UL 1569
ICEA S-95-658/NEMA WC-70
Flame Rated: IEEE 383 (70,000 BTU)
ICEA T-29-520 (210,000 BTU)
IEEE 1202/CSA FT-4
Two-hour Firewall
Temperature Rated at 90°C Wet/Dry
Sunlight and Oil Resistant II Jacket
Direct Burial[1]
Color Code: K-2 (other color codes available)
RoHS Compliant

	Part Number	Number of Conductors	Grounding Conductor (AWG)	Diameter Over Armor (inch)	PVC Jacket Thickness (mils)	Approximate Overall Diameter (inch)	Approx. Net Weight (lb/1000')		Ampacity* (30°C ambient) 90°C Wet/Dry
							Alum. Armor	Galv. Armor	
#14 AWG	AAP14/2	2	14	0.55	50	0.65	172	235	25†
	AAP14/3	3	14	0.55	50	0.65	190	254	25†
	AAP14/4	4	14	0.55	50	0.65	208	272	20†
	AAP14/5	5	14	0.59	50	0.69	237	298	20†
	AAP14/7	7	14	0.67	50	0.77	299	373	17†
	AAP14/9	9	14	0.75	50	0.85	356	443	17†
	AAP14/12	12	14	0.79	50	0.89	420	521	12
	AAP14/19	19	14	0.91	50	1.01	577	689	12
	AAP14/25	25	14	0.99	50	1.09	706	839	11
	AAP14/37	37	14	1.23	50	1.33	974	1,121	10
#12 AWG	AAP12/2	2	12	0.55	50	0.65	198	261	30†
	AAP12/3	3	12	0.55	50	0.65	225	288	30†
	AAP12/4	4	12	0.59	50	0.69	262	323	24†
	AAP12/5	5	12	0.63	50	0.73	299	375	24†
	AAP12/7	7	12	0.73	50	0.83	385	468	21†
	AAP12/9	9	12	0.81	50	0.91	459	564	21†
	AAP12/12	12	12	0.87	50	0.97	555	669	15
	AAP12/19	19	12	0.99	50	1.09	773	907	15
	AAP12/25	25	12	1.11	50	1.21	965	1,109	13
	AAP12/37	37	12	1.37	50	1.47	1,369	1,627	12
#10 AWG	AAP10/2	2	10	0.57	50	0.67	241	307	40†
	AAP10/3	3	10	0.61	50	0.71	291	355	40†
	AAP10/4	4	10	0.65	50	0.75	341	412	32†
	AAP10/5	5	10	0.69	50	0.79	391	477	32†
	AAP10/7	7	10	0.81	50	0.91	509	605	28
	AAP10/9	9	10	0.91	50	1.01	614	726	28
	AAP10/12	12	10	0.97	50	1.07	749	879	20
	AAP10/19	19	10	1.11	50	1.21	1,063	1,215	20
	AAP10/25	25	10	1.31	50	1.41	1,367	1,600	18
	AAP10/37	37	10	1.51	60	1.63	1,929	2,229	16

*Per NEC Table 310.15 (B)(16) (Ampacity derated in accordance with note 8a). [1] Includes encasement in concrete.
†The overcurrent protection for items marked with an obelisk (†) shall not exceed 15 amps for #14 AWG, 20 amps for #12 AWG, and 30 amps for #10 AWG per NEC 310-16 footnote.
** Cable with 7 conductors or more have a green insulated ground.
NOTE: The data shown is approximate and subject to standard industry tolerances

servicewire.com
Phoenix, AZ 877-623-9473
Culloden, WV 800-624-3572
Houston, TX 800-231-9473

RETURN to Table of Contents

ServiceWire Co.
Manufacturing quality. Delivering service.
Made in the USA
ISO 9001:2008

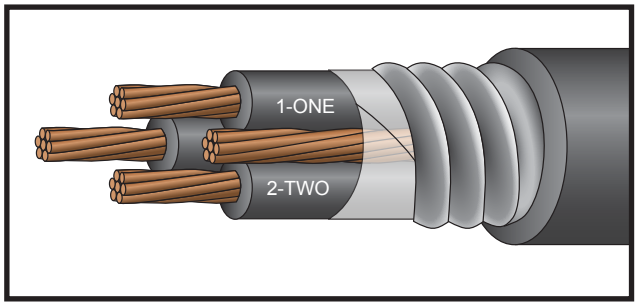

Jacketed MC

XHHW-2
600 Volt Copper

Description:
3 or 4 conductors, stranded, insulated with heat and moisture resistant crosslinked polyethylene (type XHHW-2), phase identified and cabled with suitable fillers (when necessary) and bare copper ground conductor. Cable core covered with binder tape and aluminum or galvanized steel interlocked armor, with black PVC jacket. **Jacket available in colors.**

Application:
Suitable for use in hazardous locations:
- Class I - Div 2
- Class II - Div 2

Standards:
UL 1569
ICEA S-95-658/NEMA WC-70
Flame Rated: IEEE 383 (70,000 BTU)
ICEA T-29-520 (210,000 BTU)
IEEE 1202/CSA FT-4
Two-hour Firewall
Temperature Rated at 90°C Wet/Dry
Sunlight and Oil Resistant II Jacket
Direct Burial[1]
Color Code: Method 4 (other color codes available)
RoHS Compliant

	Part Number	Size AWG or Kcmil	Strand (no.)	Insulation Thickness (mils)	Grounding Conductor (AWG)	Diameter Over Armor (inch	Jacket Thickness (mils)	Approx. Diameter Overall (inch)	Approx. Net Weight (lb/1000')		Ampacity* (30°C ambient) 90°C Wet/Dry
									Alum. Armor	Galv. Armor	
THREE CONDUCTOR	AAP8/3	8	7	45	10	0.73	50	0.83	399	482	55
	AAP6/3	6	7	45	8	0.81	50	0.91	540	636	75
	AAP4/3	4	7	45	8	0.91	50	1.01	725	846	95
	AAP3/3	3	7	45	6	0.97	50	1.07	881	1,002	115
	AAP2/3	2	7	45	6	1.03	50	1.13	1,035	1,166	130
	AAP1/3	1	19	55	6	1.15	50	1.25	1,254	1,404	145
	AAP1/03	1/0	19	55	6	1.31	50	1.41	1,537	1,771	170
	AAP2/03	2/0	19	55	6	1.37	50	1.47	1,831	2,099	195
	AAP3/03	3/0	19	55	4	1.51	60	1.63	2,295	2,555	225
	AAP4/03	4/0	19	55	4	1.63	60	1.75	2,768	3,085	260
	AAP250/3	250	37	65	4	1.81	60	1.93	3,318	3,677	290
	AAP300/3	300	37	65	3	1.93	60	2.05	3,899	4,285	320
	AAP350/3	350	37	65	3	2.03	60	2.15	4,436	4,856	350
	AAP400/3	400	37	65	3	2.13	60	2.25	4,971	5,414	380
	AAP500/3	500	37	65	2	2.29	75	2.44	6,131	6,600	430
	AAP600/3	600	61	80	2	2.55	75	2.70	7,306	7,835	475
	AAP750/3	750	61	80	1	2.77	75	2.92	8,938	9,529	535
FOUR CONDUCTOR	AAP8/4	8	7	45	10	0.79	50	0.89	480	573	55
	AAP6/4	6	7	45	8	0.87	50	0.97	655	769	75
	AAP4/4	4	7	45	8	0.99	50	1.09	898	1,031	95
	AAP3/4	3	7	45	6	1.05	50	1.15	1,080	1,233	115
	AAP2/4	2	7	45	6	1.13	50	1.23	1,295	1,442	130
	AAP1/4	1	19	55	6	1.33	50	1.43	1,613	1,861	145
	AAP1/04	1/0	19	55	6	1.43	50	1.53	1,944	2,215	170
	AAP2/04	2/0	19	55	6	1.51	60	1.63	2,366	2,666	195
	AAP3/04	3/0	19	55	4	1.65	60	1.77	2,918	3,240	225
	AAP4/04	4/0	19	55	4	1.79	60	1.91	3,542	3,906	260
	AAP250/4	250	37	65	4	1.99	60	2.11	4,239	4,639	290
	AAP300/4	300	37	65	3	2.13	60	2.25	4,991	5,434	320
	AAP350/4	350	37	65	3	2.25	75	2.40	5,767	6,238	350
	AAP400/4	400	37	65	3	2.35	75	2.50	6,469	6,952	380
	AAP500/4	500	37	65	2	2.53	75	2.68	7,898	8,433	430
	AAP600/4	600	61	80	2	2.85	75	3.00	9,442	10,052	475
	AAP750/4	750	61	80	1	3.05	85	3.22	11,618	12,274	535

*Per NEC Table 310.15 (B)(16). 4-Conductor ampacity assumes three are hot and one is neutral.
[1] Includes encasement in concrete.
NOTE: The data shown is approximate and subject to standard industry tolerances.

servicewire.com
Phoenix, AZ 877-623-9473
Culloden, WV 800-624-3572
Houston, TX 800-231-9473

RETURN to Table of Contents

ServiceWire Co.
Manufacturing quality. Delivering service.
Made in the USA
ISO 9001: 2008

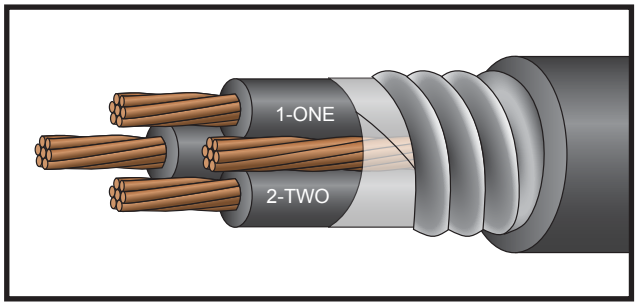

Jacketed MC

XHHW-2
50% Ground
600 Volt Copper

Description:
3 or 4 conductors, stranded, insulated with heat and moisture resistant crosslinked polyethylene (type XHHW-2), phase identified and cabled with suitable fillers (when necessary) and bare copper ground conductor (3 segmented grounds). Cable core covered with binder tape and aluminum or galvanized steel interlocked armor, with black PVC jacket. **Jacket available in colors.**

Application:
Suitable for use in hazardous locations:
- Class I - Div 2
- Class II - Div 2

Standards:
UL 1569
ICEA S-95-658/NEMA WC-70
Flame Rated: IEEE 383 (70,000 BTU)
ICEA T-29-520 (210,000 BTU)
IEEE 1202/CSA FT-4
Two-hour Firewall
Temperature Rated at 90ºC Wet/Dry
Sunlight and Oil Resistant II Jacket
Direct Burial[1]
Color Code: Method 4 (other color codes available)
RoHS Compliant

	Part Number	Size AWG or Kcmil	Strand (no.)	Insulation Thickness (mils)	Grounding Conductors (AWG)	Diameter Over Armor (inch)	PVCJacket Thickness (mils)	Approx. Diameter Overall (inch)	Approx. Net Weight (lb/1000')		Ampacity* (30°C ambient) 90°C Wet/Dry
									Alum. Armor	Galv. Armor	
THREE CONDUCTOR	AAP8/3G3#14	8	7	45	3-#14	0.73	50	0.83	405	489	55
	AAP6/3G3#12	6	7	45	3-#12	0.81	50	0.91	550	646	75
	AAP4/3G3#10	4	7	45	3-#10	0.91	50	1.01	771	892	95
	AAP3/3G3#10	3	7	45	3-#10	0.97	50	1.07	896	1,018	115
	AAP2/3G3#8	2	7	45	3-#8	1.03	50	1.13	1,107	1,238	130
	AAP1/3G3#8	1	19	55	3-#8	1.15	50	1.25	1,326	1,475	145
	AAP1/03G3#6	1/0	19	55	3-#6	1.31	50	1.41	1,701	1,935	170
	AAP2/03G3#6	2/0	19	55	3-#6	1.37	50	1.47	1,995	2,262	195
	AAP3/03G3#4	3/0	19	55	3-#4	1.51	60	1.63	2,556	2,815	225
	AAP4/03G3#4	4/0	19	55	3-#4	1.63	60	1.75	3,028	3,346	260
	AAP250/3G3#4	250	37	65	3-#4	1.81	60	1.93	3,562	3,920	290
	AAP300/3G3#3	300	37	65	3-#3	1.93	60	2.05	4,207	4,594	320
	AAP350/3G3#2	350	37	65	3-#2	2.03	60	2.15	4,866	5,286	350
	AAP400/3G3#2	400	37	65	3-#2	2.13	60	2.25	5,401	5,844	380
	AAP500/3G3#1	500	37	65	3-#1	2.29	75	2.44	6,681	7,150	430
	AAP600/3G3-1/0	600	61	80	3-1/0	2.55	75	2.70	8,050	8,579	475
	AAP750/3G3-2/0	750	61	80	3-2/0	2.77	75	2.92	9,873	10,464	535
FOUR CONDUCTOR	AAP8/4G3#14	8	7	45	3-#14	0.79	50	0.89	485	579	55
	AAP6/4G3#12	6	7	45	3-#12	0.87	50	0.97	666	778	75
	AAP4/4G3#10	4	7	45	3-#10	0.99	50	1.09	944	1,077	95
	AAP3/4G3#10	3	7	45	3-#10	1.05	50	1.15	1,105	1,248	115
	AAP2/4G3#8	2	7	45	3-#8	1.13	50	1.23	1,368	1,515	130
	AAP1/4G3#8	1	19	55	3-#8	1.33	50	1.43	1,685	1,933	145
	AAP1/04G3#6	1/0	19	55	3-#6	1.43	50	1.53	2,108	2,379	170
	AAP2/04G3#6	2/0	19	55	3-#6	1.51	60	1.63	2,529	2,829	195
	AAP3/04G3#4	3/0	19	55	3-#4	1.65	60	1.77	3,178	3,500	225
	AAP4/04G3#4	4/0	19	55	3-#4	1.79	60	1.91	3,882	4,167	260
	AAP250/4G3#4	250	37	65	3-#4	1.99	60	2.11	4,483	4,883	290
	AAP300/4G3#3	300	37	65	3-#3	2.13	60	2.25	5,300	5,743	320
	AAP350/4G3#2	350	37	65	3-#2	2.25	75	2.40	6,196	6,667	350
	AAP400/4G3#2	400	37	65	3-#2	2.35	75	2.50	6,998	7,381	380
	AAP500/4G3#1	500	37	65	3-#1	2.53	75	2.68	8,448	8,984	430
	AAP600/4G3-1/0	600	61	80	3-1/0	2.85	75	3.00	10,186	10,795	475
	AAP750/4G3-2/0	750	61	80	3-2/0	3.05	85	3.22	12,555	13,209	535

*Per NEC Table 310.15 (B)(16). 4-Conductor ampacity assumes three are hot and one is neutral.
[1]Includes encasement in concrete.
NOTE: The data shown is approximate and subject to standard industry tolerances.

servicewire.com
Phoenix, AZ 877-623-9473
Culloden, WV 800-624-3572
Houston, TX 800-231-9473

RETURN to Table of Contents

ServiceWire Co.
Manufacturing quality. Delivering service.
Made in the USA
ISO 9001:2008

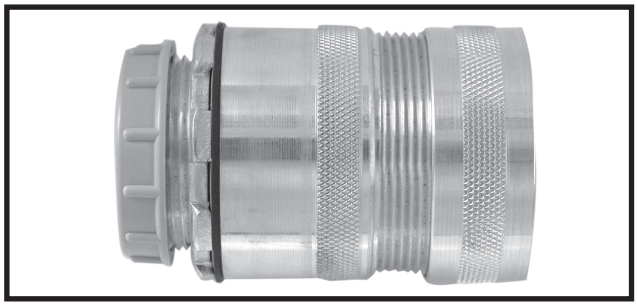

Jacketed MC Connectors Water Tight

Description:
Connectors are a one-piece body construction with a unique scroll design that can provide a 360º ground to armor. Provides fast and easy installation, eliminates internal components, prevents cable pullout and saves time and labor.

Application:
Suitable for industrial and commercial use.
Manufactured from 6061 copper-free aluminum.
A complete range of NPT (National Pipe Thread) sizes are available from 1/2" through 4". This accommodates armored cable type MC O.D. sizes from 0.38 - 4.33".

Listings:
UL: Class II and III – All Divisions

Copper AIA-PVC	Part Number	O.D. Range	Copper AIA-PVC	Part Number	O.D. Range	Copper AIA-PVC	Part Number	O.D. Range
AAP 14/2	CONW62	0.560 - 0.620	AAP 10/3	CONW69	0.620 - 0.690	AAP 1/04	CONW148	1.390 - 1.480
AAP 14/3	CONW62	0.560 - 0.620	AAP 10/4	CONW76	0.690 - 0.760	AAP 2/03	CONW148	1.390 - 1.480
AAP 14/4	CONW62	0.560 - 0.620	AAP 10/5	CONW76	0.690 - 0.760	AAP 2/04	CONW157	1.480 - 1.570
AAP 14/5	CONW69	0.620 - 0.690	AAP 10/7	CONW90	0.830 - 0.900	AAP 3/03	CONW157	1.480 - 1.570
AAP 14/7	CONW69	0.620 - 0.690	AAP 10/9	CONW97	0.900 - 0.970	AAP 3/04	CONW175	1.660 - 1.750
AAP 14/9	CONW76	0.690 - 0.760	AAP 10/12	CONW104	0.970 - 1.040	AAP 4/03	CONW166	1.570 - 1.660
AAP 14/12	CONW83	0.760 - 0.830	AAP 10/19	CONW118	1.110 - 1.180	AAP 4/04	CONW184	1.750 - 1.840
AAP 14/19	CONW104	0.970 - 1.040	AAP 10/25	CONW139	1.320 - 1.390	AAP 250/3	CONW184	1.750 - 1.840
AAP 14/25	CONW104	0.970 - 1.040	AAP 10/37	CONW166	1.570 - 1.660	AAP 250/4	CONW213	2.020 - 2.130
AAP 14/37	CONW125	1.180 - 1.250	AAP 8/3	CONW76	0.690 - 0.760	AAP 300/3	CONW202	1.930 - 2.020
AAP 12/2	CONW62	0.560 - 0.620	AAP 8/4	CONW83	0.760 - 0.830	AAP 300/4	CONW224	2.130 - 2.240
AAP 12/3	CONW62	0.560 - 0.620	AAP 6/3	CONW90	0.830 - 0.900	AAP 350/3	CONW213	2.020 - 2.130
AAP 12/4	CONW69	0.620 - 0.690	AAP 6/4	CONW97	0.900 - 0.970	AAP 350/4	CONW235	2.240 - 2.350
AAP 12/5	CONW69	0.620 - 0.690	AAP 4/3	CONW97	0.900 - 0.970	AAP 400/3	CONW224	2.130 - 2.240
AAP 12/7	CONW83	0.760 - 0.830	AAP 4/4	CONW104	0.970 - 1.040	AAP 400/4	CONW246	2.350 - 2.460
AAP 12/9	CONW83	0.760 - 0.830	AAP 3/3	CONW104	0.970 - 1.040	AAP 500/3	CONW235	2.240 - 2.350
AAP 12/12	CONW90	0.830 - 0.900	AAP 3/4	CONW111	1.040 - 1.110	AAP 500/4	CONW271	2.570 - 2.710
AAP 12/19	CONW104	0.970 - 1.040	AAP 2/3	CONW111	1.040 - 1.110	AAP 600/3	CONW271	2.570 - 2.710
AAP 12/25	CONW118	1.110 - 1.180	AAP 2/4	CONW118	1.110 - 1.180	AAP 600/4	CONW299	2.850 - 2.990
AAP 12/37	CONW139	1.320 - 1.390	AAP 1/3	CONW118	1.110 - 1.180	AAP 750/3	CONW299	2.850 - 2.990
AAP 10/2	CONW62	0.560 - 0.620	AAP 1/4	CONW139	1.320 - 1.390	AAP 750/4	CONW313	2.990 - 3.130
			AAP 1/03	CONW139	1.320 - 1.390			

servicewire.com
Phoenix, AZ 877-623-9473
Culloden, WV 800-624-3572
Houston, TX 800-231-9473

RETURN to Table of Contents

ServiceWire Co.
Manufacturing quality. Delivering service.

FM TESTED · Made in the USA · ISO 9001: 2008

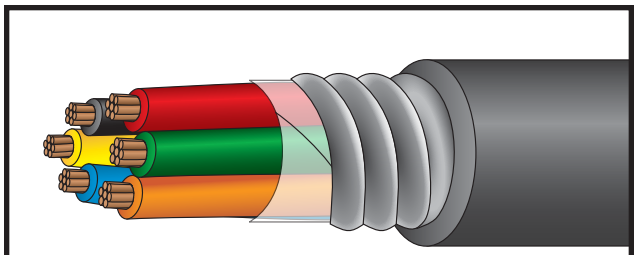

Available with tinned conductors

Jacketed MC

XHHW-2/EnviroPlus®
Factory Mutual Group 1 Spec. Tested
Zero Halogen, Limited Smoke
600 Volt Copper

Description:
Conductors are stranded copper, insulated with heat and moisture resistant crosslinked polyethylene (type XHHW-2), phase identified and cabled with a **bare copper ground conductor. Cable core is covered with binder tape and aluminum or galvanized steel interlocked armor, with an overall zero halogen, limited smoke, zero lead jacket.

Application:
Suitable for use in hazardous locations:
- Class I - Div 2
- Class II - Div 2

Standards:
UL1569
ICEA S-95-658/NEMA WC-70
Flame Rated: IEEE 383 (70,000 BTU)
IEEE 1202/CSA FT-4
UL 1685 and UL 1581
Two-hour Firewall
Temperature Rated at 90°C Wet/Dry
Cold Temperature Rated at -40ºC
Sunlight Resistant
Direct Burial[1]
Color Code: K-2 (other colors available upon request)
Zero Halogen, Limited Smoke Jacket
RoHS Compliant

	Part Number	Number of Conductors	Grounding Conductor (AWG)	Diameter Over Armor (inch)	Jacket Thickness (mils)	Approximate Overall Diameter (inch)	Net Weight (lb/1000')	Ampacity* (30°C ambient) 90°C Wet/Dry
#14 AWG	AANH14/2	2	14	0.55	50	0.65	174	25†
	AANH14/3	3	14	0.55	50	0.65	192	25†
	AANH14/4	4	14	0.55	50	0.65	210	20†
	AANH14/5	5	14	0.57	50	0.67	234	20†
	AANH14/7	7	14	0.65	50	0.75	295	17†
	AANH14/9	9	14	0.73	50	0.83	352	17†
	AANH14/12	12	14	0.77	50	0.87	416	12
	AANH14/19	19	14	0.89	50	0.99	573	12
	AANH14/37	37	14	1.15	50	1.25	964	10
#12 AWG	AANH12/2	2	12	0.55	50	0.65	199	30†
	AANH12/3	3	12	0.55	50	0.65	226	30†
	AANH12/4	4	12	0.57	50	0.67	258	24†
	AANH12/5	5	12	0.61	50	0.71	295	24†
	AANH12/7	7	12	0.71	50	0.81	381	21†
	AANH12/9	9	12	0.79	50	0.89	456	21†
	AANH12/12	12	12	0.85	50	0.95	551	15
	AANH12/19	19	12	0.97	50	1.07	770	15
	AANH12/37	37	12	1.35	50	1.45	1,365	12
#10 AWG	AANH10/2	2	10	0.55	50	0.65	237	40†
	AANH10/3	3	10	0.59	50	0.69	287	40†
	AANH10/4	4	10	0.63	50	0.73	338	32†
	AANH10/5	5	10	0.67	50	0.77	388	32†
	AANH10/7	7	10	0.79	50	0.89	505	28
	AANH10/9	9	10	0.89	50	0.99	611	28
	AANH10/12	12	10	0.95	50	1.05	745	20
	AANH10/19	19	10	1.09	50	1.19	1,059	20
	AANH10/37	37	10	1.51	60	1.63	1,933	16

*Per NEC Table 310.15 (B)(16) (Ampacity derated in accordance with note 8a).
[1] Includes encasement in concrete.
†The overcurrent protection for items marked with an obelisk (†) shall not exceed 15 amps for #14 AWG, 20 amps for #12 AWG, and 30 amps for #10 AWG per NEC 310-16 footnote.
**Cable with 7 conductors or more shall have a green insulated ground.
NOTE: The data shown is approximate and subject to standard industry tolerances.

servicewire.com
Phoenix, AZ 877-623-9473
Culloden, WV 800-624-3572
Houston, TX 800-231-9473

RETURN to Table of Contents

ServiceWire Co.
Manufacturing quality. Delivering service.

FM TESTED · Made in the USA · ISO 9001:2008

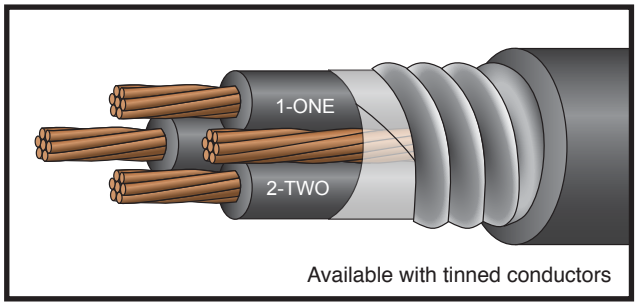

Available with tinned conductors

Jacketed MC

XHHW-2/EnviroPlus®
Factory Mutual Group 1 Spec. Tested
Zero Halogen, Limited Smoke
600 Volt Copper

Description:
3 or 4 conductors, stranded, insulated with heat and moisture resistant crosslinked polyethylene (type XHHW-2), phase identified and cabled with suitable fillers (as necessary) and bare copper ground conductor. Cable core is covered with binder tape and aluminum or galvanized steel interlocked armor, with zero halogen, limited smoke, zero lead jacket.

Application:
Suitable for use in hazardous locations:
- Class I - Div 2
- Class II - Div 2

Standards:
UL1569
ICEA S-95-658/NEMA WC-70
Flame Rated: IEEE 383 (70,000 BTU)
IEEE 1202/CSA FT-4
UL 1685 and UL 1581
Two-hour Firewall
Temperature Rated at 90ºC Wet/Dry
Cold Temperature Rated at -40ºC
Sunlight Resistant
Direct Burial[1]
Color Code: Method 4 (other colors available upon request)
Zero Halogen, Limited Smoke Jacket
RoHS Compliant

	Part Number	Size AWG or Kcmil	Strand (no.)	Insulation Thickness (mils)	Grounding Conductor (AWG)	Diameter Over Armor (inch)	Jacket Thickness (mils)	Approx. Diameter Overall (inch)	Approx. Net Weight (lb/1000')		Ampacity* (30°C ambient) 90°C Wet/Dry
									Alum. Armor	Galv. Armor	
THREE CONDUCTOR	AANH8/3	8	7	45	10	0.73	50	0.83	405	489	55
	AANH6/3	6	7	45	8	0.81	50	0.91	547	643	75
	AANH4/3	4	7	45	8	0.91	50	1.01	733	854	95
	AANH3/3	3	7	45	6	0.97	50	1.07	889	1,011	115
	AANH2/3	2	7	45	6	1.03	50	1.13	1,044	1,175	130
	AANH1/3	1	19	55	6	1.15	50	1.25	1,264	1,414	145
	AANH1/03	1/0	19	55	6	1.31	50	1.41	1,548	1,782	170
	AANH2/03	2/0	19	55	6	1.37	50	1.47	1,843	2,110	195
	AANH3/03	3/0	19	55	4	1.51	60	1.63	2,311	2,567	225
	AANH4/03	4/0	19	55	4	1.63	60	1.75	2,785	3,102	260
	AANH250/3	250	37	65	4	1.81	60	1.93	3,337	3,695	290
	AANH350/3	350	37	65	3	2.03	60	2.15	4,303	4,723	350
	AANH500/3	500	37	65	2	2.29	75	2.44	5,956	6,425	430
	AANH600/3	600	61	80	2	2.55	75	2.70	7,074	7,603	475
	AANH750/3	750	61	80	1	2.77	75	2.92	8,658	9,249	535
FOUR CONDUCTOR	AANH8/4	8	7	45	10	0.79	50	0.89	485	579	55
	AANH6/4	6	7	45	8	0.87	50	0.97	663	775	75
	AANH4/4	4	7	45	8	0.99	50	1.09	907	1,040	95
	AANH3/4	3	7	45	6	1.05	50	1.15	1,099	1,242	115
	AANH2/4	2	7	45	6	1.13	50	1.23	1,305	1,452	130
	AANH1/4	1	19	55	6	1.33	50	1.43	1,624	1,872	145
	AANH1/04	1/0	19	55	6	1.43	50	1.53	1,956	2,227	170
	AANH2/04	2/0	19	55	6	1.51	60	1.63	2,381	2,681	195
	AANH3/04	3/0	19	55	4	1.65	60	1.77	2,935	3,256	225
	AANH4/04	4/0	19	55	4	1.79	60	1.91	3,560	3,925	260
	AANH250/4	250	37	65	4	1.99	60	2.11	4,259	4,659	290
	AANH350/4	350	37	65	3	2.25	75	2.40	5,623	6,094	350
	AANH500/4	500	37	65	2	2.53	75	2.68	7,702	8,238	430
	AANH600/4	600	61	80	2	2.85	75	3.00	9,183	9,792	475
	AANH750/4	750	61	80	1	3.05	85	3.22	11,310	11,965	535

*Per NEC Table 310.15 (B)(16). 4-Conductor ampacity assumes three are hot and one is neutral.
[1]Includes encasement in concrete.
NOTE: The data shown is approximate and subject to standard industry tolerances.

servicewire.com
Phoenix, AZ 877-623-9473
Culloden, WV 800-624-3572
Houston, TX 800-231-9473

RETURN to Table of Contents

ServiceWire Co.
Manufacturing quality. Delivering service.
Made in the USA
ISO 9001: 2008

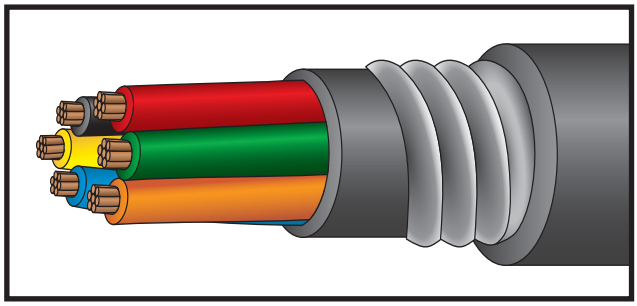

Teck90 ServiceTeck® Jacketed MC

XHHW-2/PVC 600 Volt Copper

Description:
Class B stranded copper, insulated with heat and moisture resistant crosslinked polyethylene (type XHHW-2), phase identified and cabled with **bare copper ground conductor. Cable core covered with binder tape, an inner PVC jacket, aluminum interlocked armor and outer PVC jacket.

Application:
Suitable for use in exposed or concealed wiring in dry or wet locations, in ventilated or ladder type cable trays in dry or wet conditions, on walls or beams, or directly buried.

Suitable for use in hazardous locations:
- Class I - Groups A, B, C and D
- Class II - Groups E, F and G
- Class III - All Groups

Standards:
UL 1569
C(UL) Teck 90: CSA/UL Listed
ICEA S-95-658/NEMA WC-70
Flame Rated: IEEE 383 (70,000 BTU)
ICEA T-29-520 (210,000 BTU)
FT-4 Flame Test
IEEE 1202/CSA FT-4
Two-hour Firewall
Temperature Rated at 90°C Wet/Dry
Sunlight and Oil Resistant II Jacket
Direct Burial[1]
Color Code: K-2 (3 and 5-19 conductor)
K-2 and Neutral White (2 and 4 conductor)
RoHS Compliant

	Part Number	Number of Conductors	Grounding Conductor (AWG)	PVC Jacket Thickness		Diameter			Approximate Net Weight (lb/1000')	Ampacity* (30°C ambient) 90°C Wet/Dry
				Inner (mils)	Outer (mils)	Inner Jacket	Armor	Overall		
#14 AWG	PAAP14/2	2	14	50	50	0.39	0.59	0.69	214	25†
	PAAP14/3	3	14	50	50	0.41	0.61	0.71	239	25†
	PAAP14/4	4	14	50	50	0.44	0.65	0.75	271	20†
	PAAP14/5	5	14	50	50	0.48	0.69	0.79	303	20†
	PAAP14/7	7	14	50	50	0.56	0.77	0.87	372	17†
	PAAP14/9	9	14	50	50	0.64	0.85	0.95	436	17†
	PAAP14/12	12	14	50	50	0.69	0.89	0.99	505	12
	PAAP14/19	19	14	50	50	0.80	1.01	1.11	673	12
#12 AWG	PAAP12/2	2	12	50	50	0.42	0.63	0.73	253	30†
	PAAP12/3	3	12	50	50	0.45	0.65	0.75	287	30†
	PAAP12/4	4	12	50	50	0.49	0.69	0.79	328	24†
	PAAP12/5	5	12	50	50	0.53	0.73	0.83	369	24†
	PAAP12/7	7	12	50	50	0.62	0.83	0.93	464	21†
	PAAP12/9	9	12	50	50	0.71	0.91	1.01	547	21†
	PAAP12/12	12	12	50	50	0.77	0.97	1.07	648	15
	PAAP12/19	19	12	50	50	0.89	1.09	1.19	878	15
#10 AWG	PAAP10/2	2	10	50	50	0.47	0.67	0.77	306	40†
	PAAP10/3	3	10	50	50	0.50	0.71	0.81	358	40†
	PAAP10/4	4	10	50	50	0.54	0.75	0.85	413	32†
	PAAP10/5	5	10	50	50	0.59	0.79	0.89	467	32†
	PAAP10/7	7	10	50	50	0.70	0.91	1.01	595	28
	PAAP10/9	9	10	50	50	0.80	1.01	1.11	710	28
	PAAP10/12	12	10	50	50	0.87	1.07	1.17	851	20
	PAAP10/19	19	10	50	50	1.01	1.27	1.37	1,208	20

*Per NEC Table 310.15 (B)(16). [1]Includes encasement in concrete.
**Cable with 7 conductors or more shall have a green insulated ground.
NOTE: The data shown is approximate and subject to standard industry tolerances

servicewire.com
Phoenix, AZ 877-623-9473
Culloden, WV 800-624-3572
Houston, TX 800-231-9473

RETURN to Table of Contents

ServiceWire Co.
Manufacturing quality. Delivering service.
Made in the USA
ISO 9001:2008

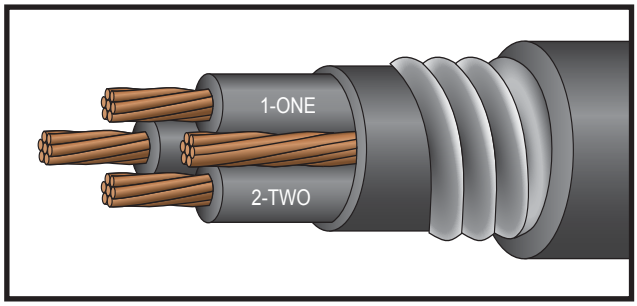

Teck90 ServiceTeck® Jacketed MC

XHHW-2/PVC 600 Volt Copper

Description:
Stranded copper, insulated with heat and moisture resistant crosslinked polyethylene (type XHHW-2), phase identified and cabled with bare copper ground conductor(s). Cable core covered with binder tape, an inner PVC jacket, aluminum interlocked armor and outer PVC jacket.

Application:
Suitable for use in exposed or concealed wiring in dry or wet locations, in ventilated or ladder type cable trays in dry or wet conditions, on walls or beams, directly buried.

Suitable for use in hazardous locations:
- Class I - Groups A, B, C and D
- Class II - Groups E, F and G
- Class III - All Groups

Standards:
UL 1569
C(UL) Teck 90:CSA/UL Listed
ICEA S-95-658/NEMA WC-70
Flame Rated: IEEE 383 (70,000 BTU)
ICEA T-29-520 (210,000 BTU)
IEEE 1202/CSA FT-4
Two-hour Firewall
Temperature Rated at 90°C Wet/Dry
Sunlight and Oil Resistant II Jacket
Direct Burial[1]
Color Code: Method 4 (other color codes available)
RoHS Compliant

	Part Number	Size AWG or Kcmil	Strand (no.)	Insulation Thickness (mils)	Grounding Conductor (AWG)	PVC Jacket Thickness (mils)		Diameter			Approx. Net Weight (lb/1000')	Ampacity* 90°C
						Inner (mils)	Outer (mils)	Inner Jacket	Armor	Overall		
THREE CONDUCTOR	PAAP8/3	8	7	45	10	50	50	0.62	0.83	0.93	478	55
	PAAP6/3	6	7	45	8	50	50	0.70	0.91	1.01	648	75
	PAAP4/3	4	7	45	8	50	50	0.81	1.01	1.11	854	95
	PAAP3/3	3	7	45	6	50	50	0.86	1.07	1.17	1,017	115
	PAAP2/3	2	7	45	6	50	50	0.93	1.13	1.23	1,185	130
	PAAP1/3	1	19	55	6	50	50	1.04	1.31	1.41	1,459	145
	PAAP1/03	1/0	19	55	6	50	50	1.13	1.41	1.51	1,736	170
	PAAP2/03	2/0	19	55	6	50	50	1.22	1.49	1.59	2,059	195
	PAAP3/03	3/0	19	55	4	50	60	1.33	1.61	1.73	2,544	225
	PAAP4/03	4/0	19	55	4	50	60	1.45	1.73	1.85	3,053	260
	PAAP250/3	250	37	65	4	60	60	1.65	1.93	2.05	3,579	290
	PAAP350/3	350	37	65	3	60	60	1.88	2.17	2.29	4,744	350
	PAAP500/3	500	37	65	2	60	75	2.13	2.41	2.56	6,485	430
	PAAP600/3	600	61	80	2	75	75	2.43	2.71	2.86	7,794	475
	PAAP750/3	750	61	80	1	75	75	2.64	2.91	3.06	9,470	535
FOUR CONDUCTOR	PAAP8/4	8	7	45	10	50	50	0.68	0.89	0.99	564	55
	PAAP6/4	6	7	45	8	50	50	0.77	0.97	1.07	773	75
	PAAP4/4	4	7	45	8	50	50	0.89	1.09	1.19	1,039	95
	PAAP3/4	3	7	45	6	50	50	0.95	1.15	1.25	1,239	115
	PAAP2/4	2	7	45	6	50	50	1.02	1.27	1.37	1,484	130
	PAAP1/4	1	19	55	6	50	50	1.15	1.43	1.53	1,807	145
	PAAP1/04	1/0	19	55	6	50	60	1.25	1.51	1.63	2,187	170
	PAAP2/04	2/0	19	55	6	50	60	1.36	1.63	1.75	2,619	195
	PAAP3/04	3/0	19	55	4	50	60	1.47	1.75	1.87	3,193	225
	PAAP4/04	4/0	19	55	4	60	60	1.63	1.91	2.03	3,894	260
	PAAP250/4	250	37	65	4	60	60	1.83	2.13	2.25	4,532	290
	PAAP350/4	350	37	65	3	60	75	2.09	2.35	2.50	6,096	350
	PAAP500/4	500	37	65	2	75	75	2.40	2.69	2.84	8,369	430
	PAAP600/4	600	61	80	2	75	75	2.70	2.97	3.12	9,968	475
	PAAP750/4	750	61	80	1	75	85	2.93	3.21	3.38	12,215	535

*Per NEC Table 310.15 (B)(16). 4-Conductor ampacity assumes three are hot and one is neutral. [1]Includes encasement in concrete.
NOTE: The data shown is approximate and subject to standard industry tolerances

servicewire.com
Phoenix, AZ 877-623-9473
Culloden, WV 800-624-3572
Houston, TX 800-231-9473

RETURN to Table of Contents

ServiceWire Co.
Manufacturing quality. Delivering service.
Made in the USA
ISO 9001: 2008

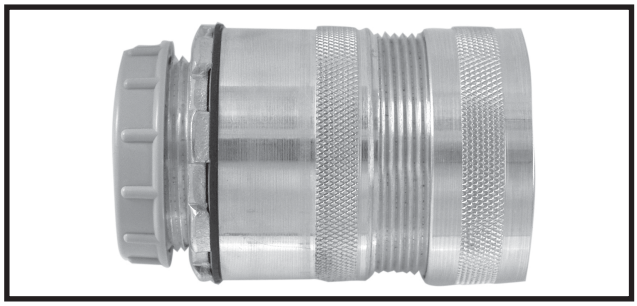

Teck90 Jacketed MC Connectors

For ServiceTeck®

Description:
Connectors are a one-piece body construction with a unique scroll design that provides a 360º ground to armor. Provides a fast and easy installation, eliminates internal components, prevents cable pullout and saves time and labor.

Application:
Suitable for industrial and commercial use.
Manufactured from 6061 copper-free aluminum.
A complete range of NPT (National Pipe Thread) sizes are available from 1/2" through 4" to accommodate armored cable type MC O.D. sizes from 0.38 - 4.33".

Listings:
UL: Class II and III – All Divisions

Item	Diameter Over Armor	Water Tight Connector Size	Item	Diameter Over Armor	Water Tight Connector Size	Item	Diameter Over Armor	Water Tight Connector Size
PAAP14/2	0.62	CONW62	PAAP10/4	0.83	CONW83	PAAP500/3	2.57	CONW257
PAAP14/3	0.69	CONW69	PAAP10/5	0.83	CONW83	PAAP600/3	2.85	CONW285
PAAP14/4	0.69	CONW69	PAAP10/7	0.97	CONW97	PAAP750/3	3.13	CONW313
PAAP14/5	0.76	CONW76	PAAP10/9	1.04	CONW104	PAAP8/4	0.97	CONW97
PAAP14/7	0.83	CONW83	PAAP10/12	1.11	CONW111	PAAP6/4	1.04	CONW104
PAAP14/9	0.90	CONW90	PAAP10/19	1.32	CONW132	PAAP4/4	1.18	CONW118
PAAP14/12	0.97	CONW97	PAAP8/3	0.90	CONW90	PAAP3/4	1.25	CONW125
PAAP14/19	1.04	CONW104	PAAP6/3	1.04	CONW104	PAAP2/4	1.39	CONW139
PAAP12/2	0.69	CONW69	PAAP4/3	1.11	CONW111	PAAP1/4	1.48	CONW148
PAAP12/3	0.69	CONW69	PAAP3/3	1.11	CONW111	PAAP1/04	1.57	CONW157
PAAP12/4	0.76	CONW76	PAAP2/3	1.25	CONW125	PAAP2/04	1.66	CONW166
PAAP12/5	0.76	CONW76	PAAP1/3	1.39	CONW139	PAAP3/04	1.84	CONW184
PAAP12/7	0.90	CONW90	PAAP1/03	1.48	CONW148	PAAP4/04	2.02	CONW202
PAAP12/9	0.97	CONW97	PAAP2/03	1.57	CONW157	PAAP250/4	2.24	CONW224
PAAP12/12	1.04	CONW104	PAAP3/03	1.66	CONW166	PAAP350/4	2.46	CONW246
PAAP12/19	1.18	CONW118	PAAP4/03	1.75	CONW175	PAAP500/4	2.85	CONW285
PAAP10/2	0.76	CONW76	PAAP250/3	2.02	CONW202	PAAP600/4	3.13	CONW313
PAAP10/3	0.76	CONW76	PAAP350/3	2.35	CONW235	PAAP750/4	3.28	CONW328

servicewire.com
Phoenix, AZ 877-623-9473
Culloden, WV 800-624-3572
Houston, TX 800-231-9473

RETURN to Table of Contents

ServiceWire Co.
Manufacturing quality. Delivering service.
Made in the USA
ISO 9001:2008

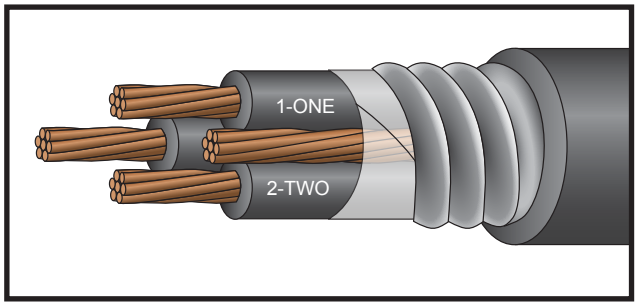

Jacketed MC

RHW-2/PVC
2,000 Volt Copper

Description:
3 conductors, stranded, insulated with heat and moisture resistant crosslinked polyethylene (type RHW-2), phase identified and cabled with suitable fillers and bare copper grounding conductor. Cable core covered with binder tape and aluminum or galvanized steel interlocked armor, with black PVC jacket. **Jacket available under armor and in colors. Available with EnviroPlus® (LSZH) jacket.**

Application:
Suitable for use in industrial power distribution systems where continuity of service is the prime consideration. May be installed in wet or dry locations, directly buried or embedded in concrete.

Suitable for use in cable tray.

Suitable for use in hazardous locations:
- Class I - Div 2
- Class II - Div 2

Standards:
UL 44, UL 854 and UL 1569
ICEA S-95-658/NEMA WC-70
Flame Rated: IEEE 383 (70,000 BTU)
ICEA T-29-520 (210,000 BTU)
IEEE 1202/CSA FT-4
Two-hour Firewall
Temperature Rated at 90°C Wet /Dry
Sunlight and Oil Resistant II Jacket
Direct Burial[1]
Color Code: Method 4
RoHS Compliant

	Part Number	Size AWG or Kcmil	Strand (no.)	Insulation Thickness (mils)	Grounding Conductor (AWG)	Diameter Over Armor (inch)	Jacket Thickness (mils)	Approx. Diameter Overall (inch)	Approx. Net Weight (lb/1000')		Ampacity* (30°C ambient)
									Alum. Armor	Galv. Armor	
THREE CONDUCTOR	AAP2K6/3	6	7	85	8	0.99	50	1.09	640	765	75
	AAP2K4/3	4	7	85	6	1.09	50	1.19	834	975	95
	AAP2K2/3	2	7	85	6	1.27	50	1.37	1,159	1,427	130
	AAP2K1/3	1	7	105	6	1.41	50	1.51	1,414	1,718	145
	AAP2K1/03	1/0	19	105	6	1.51	60	1.63	1,715	2,044	170
	AAP2K2/03	2/0	19	105	6	1.61	60	1.73	2,109	2,432	195
	AAP2K3/03	3/0	19	105	4	1.71	60	1.83	2,497	2,843	225
	AAP2K4/03	4/0	19	105	4	1.85	60	1.97	2,990	3,358	260
	AAP2K250/3	250	37	120	4	2.05	60	2.17	3,624	4,038	290
	AAP2K350/3	350	37	120	3	2.27	75	2.42	4,843	5,240	350
	AAP2K500/3	500	37	120	2	2.53	75	2.68	6,514	7,050	430
	AAP2K750/3	750	61	135	1	3.01	85	3.18	9,447	10,093	535

*Per NEC Table 310.15 (B)(16).
[1]Includes encasement in concrete.
NOTE: The data shown is approximate and subject to standard industry tolerances.

servicewire.com
Phoenix, AZ 877-623-9473
Culloden, WV 800-624-3572
Houston, TX 800-231-9473

RETURN to Table of Contents

ServiceWire Co.
Manufacturing quality. Delivering service.
Made in the USA
ISO 9001: 2008

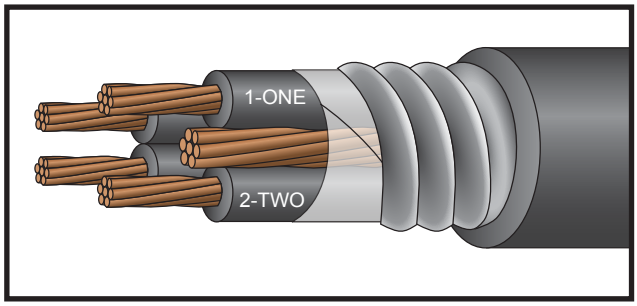

Jacketed MC

RHW-2/PVC
2,000 Volt Copper

Description:
4 Conductors, stranded, insulated with heat and moisture resistant crosslinked polyethylene (type RHW-2), phase identified and cabled with suitable fillers and bare copper grounding conductor. Cable core covered with binder tape and aluminum or galvanized steel interlocked armor, with black PVC jacket. **Jacket available under armor and in colors. Available with EnviroPlus® (LSZH)jacket.**

Application:
Suitable for use in industrial power distribution systems where continuity of service is the prime consideration. May be installed in wet or dry locations, directly buried or embedded in concrete.

Suitable for use in cable tray.

Suitable for use in hazardous locations:
Class I - Div 2
Class II - Div 2

Standards:
UL 44, UL 854 and UL 1569
ICEA S-95-658/NEMA WC-70
Flame Rated: IEEE 383 (70,000 BTU)
ICEA T-29-520 (210,000 BTU)
IEEE 1202/CSA FT-4
Two-hour Firewall
Temperature Rated at 90°C Wet/Dry
Sunlight and Oil Resistant II Jacket
Direct Burial[1]
Color Code: Method 4
RoHS Compliant

	Part Number	Size AWG or Kcmil	Strand (no.)	Insulation Thickness (mils)	Grounding Conductor (AWG)	Diameter Over Armor (inch)	PVC Jacket Thickness (mils)	Approx. Diameter Overall (inch)	Approx. Net Weight (lb/1000')		Ampacity* (30°C ambient)
									Alum. Armor	Galv. Armor	
FOUR CONDUCTOR	AAP2K6/4	6	7	85	8	1.07	50	1.17	778	924	75
	AAP2K4/4	4	7	85	8	1.23	50	1.33	1,034	1,195	95
	AAP2K2/4	2	7	85	6	1.37	50	1.47	1,469	1,737	130
	AAP2K1/4	1	7	105	6	1.57	60	1.69	1,849	2,152	145
	AAP2K1/04	1/0	19	105	6	1.67	60	1.79	2,204	2,531	170
	AAP2K2/04	2/0	19	105	4	1.79	60	1.91	2,672	3,036	195
	AAP2K3/04	3/0	19	105	4	1.89	60	2.01	3,179	3,554	225
	AAP2K4/04	4/0	19	105	4	2.03	60	2.15	3,822	4,231	260
	AAP2K250/4	250	37	120	4	2.25	60	2.37	4,619	5,090	290
	AAP2K350/4	350	37	120	3	2.53	75	2.68	6,203	6,717	350
	AAP2K500/4	500	37	120	2	2.85	75	3.00	8,397	9,006	430
	AAP2K750/4	750	61	135	1	3.33	85	3.50	12,195	12,903	535

*Per NEC Table 310.15 (B)(16). 4-Conductor ampacity assumes three are hot and one is neutral.
[1] Includes encasement in concrete.
NOTE: The data shown is approximate and subject to standard industry tolerances.

servicewire.com
Phoenix, AZ 877-623-9473
Culloden, WV 800-624-3572
Houston, TX 800-231-9473

RETURN to Table of Contents

ServiceWire Co.
Manufacturing quality. Delivering service.
Made in the USA
ISO 9001:2008

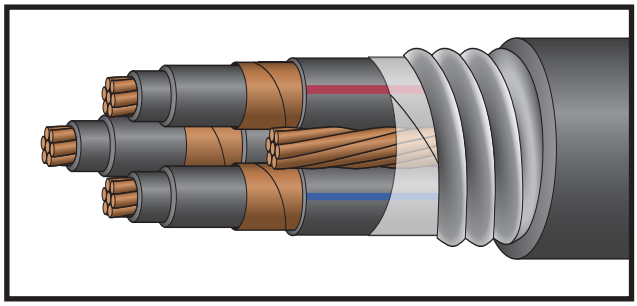

MV-90/MV-105 Jacketed MC

Nonshielded/Shielded, EPR 2,400/5,000 Volt Copper

Description:

Nonshielded: Class B stranded copper with extruded conductor shield, insulated with heat and moisture resistant EPR (2,400 volt rated).

Shielded: Class B stranded copper with extruded semi-conductor shield, insulated with heat and moisture resistant EPR (5,000 volt rated – 133% insulation level; 8,000 volt rated – 100% insulation level) with conductor jacket (PVC, CPE, etc.). 3 conductors cabled with suitable fillers** and bare copper ground conductor. Cable core covered with binder tape, aluminum or galvanized interlocked armor and yellow PVC jacket. **Jacket available under armor and in colors.**

Standards:

UL 1072
Non-shielded: ICEA S-96-659/NEMA WC-71
Shielded: ICEA S-93-639/NEMA WC-74
Flame Rated: IEEE 383 (70,000 BTU)
ICEA T-29-520 (210,000 BTU)
IEEE 1202/CSA FT-4
Conductors Rated at 105°C (5kV)/90°C (2.4kV)
Sunlight and Oil Resistant II Jacket
Direct Burial[1]
Color Code: K-2 Stripes
RoHS Compliant

Application:

Suitable for use in hazardous locations:
Class I - Div 2

	Part Number	Size AWG or Kcmil	Strand (no.)	Conductor		Grounding Conductor (AWG)	Diameter Over Armor (inch)	PVC Jacket Thickness (mils)	Approx. Diameter Overall (inch)	Approx. Net Weight (lb/1000')		Ampacity* (40°C ambient)
				Insulation Thickness (mils)	Jacket Thickness (mils)					Alum. Armor	Galv. Armor	
NON-SHIELDED	AP2.4K6/3E	6	7	125	80	6	1.65	60	1.77	1,234	1,555	69
	AP2.4K4/3E	4	7	125	80	6	1.75	60	1.87	1,463	1,818	91
	AP2.4K2/3E	2	7	125	80	6	1.89	60	2.01	1,795	2,172	125
	AP2.4K1/3E	1	19	125	80	4	1.95	60	2.07	2,076	2,467	140
	AP2.4K1/03E	1/0	19	125	80	4	2.03	60	2.15	2,345	2,765	165
	AP2.4K2/03E	2/0	19	125	80	4	2.17	60	2.29	2,693	3,124	190
	AP2.4K4/03E	4/0	19	125	95	3	2.49	75	2.64	4,015	4,530	255
	AP2.4K250/3E	250	37	140	110	3	2.65	75	2.80	4,769	5,332	280
	AP2.4K350/3E	350	37	140	110	2	2.89	75	3.04	6,017	6,635	350
	AP2.4K500/3E	500	37	140	110	1	3.17	85	3.34	7,881	8,564	425
	AP2.4K750/3E	750	61	155	125	1/0	3.69	85	3.86	11,594	12,397	525
SHIELDED	AP5KS6/3E	6	7	115	60	6	1.75	60	1.87	1,478	1,833	69
	AP5KS4/3E	4	7	115	60	6	1.89	60	2.01	1,765	2,142	91
	AP5KS2/3E	2	7	115	60	6	1.99	60	2.11	2,085	2,496	125
	AP5KS1/3E	1	19	115	60	4	2.09	60	2.21	2,889	2,889	140
	AP5KS1/03E	1/0	19	115	80	4	2.27	75	2.42	2,898	3,374	165
	AP5KS2/03E	2/0	19	115	80	4	2.37	75	2.52	3,268	3,766	190
	AP5KS4/03E	4/0	19	115	80	3	2.57	75	2.72	4,255	4,800	255
	AP5KS250/3E	250	37	115	80	3	2.71	75	2.86	5,075	5,641	280
	AP5KS350/3E	350	37	115	80	2	2.91	75	3.06	6,326	6,950	350
	AP5KS500/3E	500	37	115	80	1	3.25	85	3.42	8,650	9,352	425
	AP5KS750/3E	750	61	115	80	1/0	3.65	85	3.65	11,827	12,621	525

*Per NEC Table 310.60 (C)(75). Based on one three-conductor cable.
**Fillers used when required.
NOTE: The data shown is approximate and subject to standard industry tolerances.
[1] Includes encasement in concrete.

servicewire.com
Phoenix, AZ 877-623-9473
Culloden, WV 800-624-3572
Houston, TX 800-231-9473

RETURN to Table of Contents

ServiceWire Co.
Manufacturing quality. Delivering service.
Made in the USA
ISO 9001: 2008

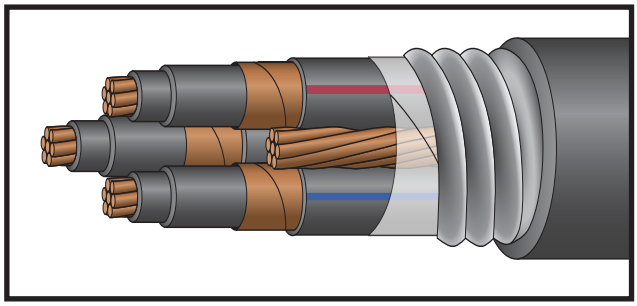

MV-105/Jacketed MC

133% Jacketed EPR
15,000 Volt Copper

Description:
Class B stranded copper with extruded semi-conductor shield, insulated with heat and moisture resistant EPR (133% insulation level) with conductor jacket (PVC, CPE, etc.). Cabled with suitable fillers** and bare copper ground conductor. Cable core covered with binder tape, aluminum or galvanized steel interlocked armor and red PVC jacket. **Jacket available under armor and in colors.**

Application:
Suitable for use in hazardous locations:
Class I - Div 2

Standards:
UL 1072
ICEA S-93-639/NEMA WC-74
Flame Rated: IEEE 383 (70,000 BTU)
ICEA T-29-520 (210,000 BTU)
IEEE 1202/CSA FT-4
Temperature Rated at 105°C Wet/Dry (conductors)
Sunlight and Oil Resistant II Jacket
Direct Burial[1]
Color Code: K-2 Stripes
RoHS Compliant

	Part Number	Size AWG or Kcmil	Strand (no.)	Conductor		Grounding Conductor (AWG)	Diameter Over Armor (inch)	PVC Jacket Thickness (mils)	Approx. Diameter Overall (inch)	Approx. Net Weight (lb/1000')		Ampacity* (40°C ambient)
				Insulation Thickness (mils)	Jacket Thickness (mils)					Alum. Armor	Galv. Armor	
133% EPR INSULATION	AP15K2/3E	2	7	220	80	6	2.57	75	2.72	2,987	3,527	145
	AP15K1/3E	1	19	220	80	4	2.65	75	2.80	3,298	3,861	165
	AP15K1/03E	1/0	19	220	80	4	2.77	75	2.92	3,674	4,243	195
	AP15K2/03E	2/0	19	220	80	4	2.85	75	3.00	4,083	4,692	220
	AP15K4/03E	4/0	19	220	80	3	3.09	85	3.26	5,100	5,733	290
	AP15K250/3E	250	37	220	80	3	3.21	85	3.38	6,180	6,872	315
	AP15K350/3E	350	37	220	80	2	3.41	85	3.58	7,507	8,246	385
	AP15K500/3E	500	37	220	80	1	3.69	85	3.86	9,878	10,682	470
	AP15K750/3E	750	61	220	110	1/0	4.21	85	4.38	13,610	14,537	570

*Per NEC Table 310.60 (C)(75). Based on one three-conductor cable.
[1]Includes encasement in concrete.
**Fillers used when required.
NOTE: The data shown is approximate and subject to standard industry tolerances.

servicewire.com
Phoenix, AZ 877-623-9473
Culloden, WV 800-624-3572
Houston, TX 800-231-9473

RETURN to Table of Contents

ServiceWire Co.
Manufacturing quality. Delivering service.
Made in the USA
ISO 9001:2008

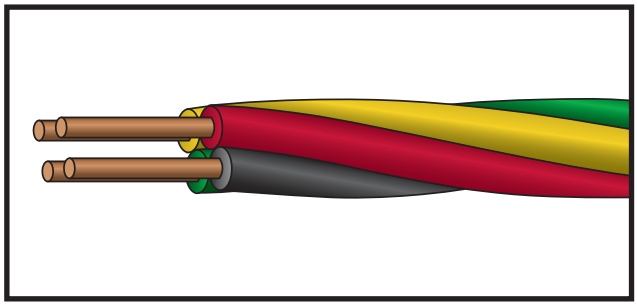

THW/Submersible Pump Cable

Twisted
600 Volt Copper

Description:
Solid or stranded copper conductors, insulated with PVC (type THW), twisted with a green insulated ground conductor.

Applications:
Suitable for use within the well casing to supply power to the pump.

Specifications & Standards:
UL 83 and UL1581
Temperature Rated at 75ºC Wet/Dry
Oil and Grease Resistant
Color Code: Black, Red, Yellow, Green (ground)
RoHS Compliant

TWO OR THREE CONDUCTORS WITH GREEN INSULATED GROUNDING CONDUCTOR

Part Number	Conductor Size, AWG		Dimensions (inches)		Standard Packaging	Ampacity NEC§	Weight (lb/1000')
	Power	Ground	Insulation	O.D.			
PT14/2GG	14/2 (solid)	14 (solid)	0.045	0.33	500' & 1000'	15	67
PT12/2GG	12/2 (solid)	12 (solid)	0.045	0.37	250', 500' & 1000'	20	94
PT10/2GG	10/2 (solid)	10 (solid)	0.045	0.41	500' & 1000'	30	135
PT14/3GG	14/3 (solid)	14 (solid)	0.045	0.37	500' & 1000'	15	89
PT12/3GG	12/3 (solid)	12 (solid)	0.045	0.41	500' & 1000'	20	125
PT10/3GG	10/3 (solid)	10 (solid)	0.045	0.46	500' & 1000'	30	180
PT8/3GG	8/3 (7 str)	10 (7 str)	0.060	0.63	500' & 1000'	50	276
PT6/3GG	6/3 (7 str)	8 (7 str)	0.060	0.72	500' & 1000'	65	417
PT4/3GG	4/3 (7 str)	8 (7 str)	0.060	0.84	500' & 1000'	85	585
PT2/3GG	2/3 (7 str)	6 (7 str)	0.060	1.00	500' & 1000'	115	861

§Per NEC Table 310.15 (B)(16).
#2 AWG through 4/0 AWG Twisted Unjacketed available upon request.
NOTE: The data shown is approximate and subject to standard industry tolerances.

servicewire.com
Phoenix, AZ 877-623-9473
Culloden, WV 800-624-3572
Houston, TX 800-231-9473

ServiceWire Co.
Manufacturing quality. Delivering service.
Made in the USA
ISO 9001: 2008

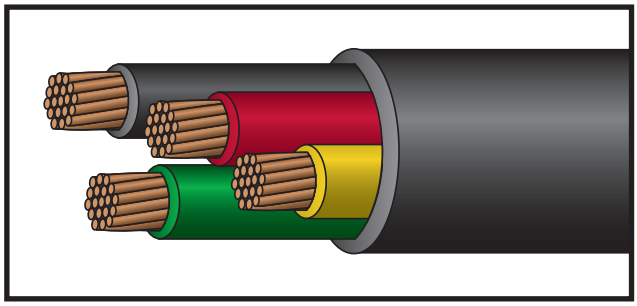

THW/Submersible Pump Cable

Round Jacketed 600 Volt Copper

Description:
Stranded copper conductors, insulated with color coded PVC (type THW), twisted with green insulated ground (optional) and an overall PVC jacket.

Application:
Suitable for use within the well casing to supply power to the pump and where extra mechanical protection during installation and operation are required.

Standards:
UL 83 and UL1581
Temperature Rated at 75°C Wet/Dry
Oil and Grease Resistant
Acid, Alkali, Oil, Grease, Weather, Ozone and Sunlight Resistant Jacket
Color Code: Black, Red, Yellow, Green (ground)
RoHS Compliant

THREE CONDUCTORS WITH NO GROUND

Part Number	Conductor Size, AWG		Dimensions (inches)			Standard Packaging	Ampacity NEC§	Weight (lb/1000')
	Power	Ground	Insulation	Jacket	O.D.			
PTJ12/3	12 (7 str)		0.045	0.045	0.48	500' & 1,000'	20	137
PTJ10/3	10 (7 str)		0.045	0.045	0.53	500' & 1,000'	30	184
PTJ8/3	8 (7 str)		0.060	0.045	0.69	500' & 1,000'	50	302
PTJ6/3	6 (19 str)		0.060	0.045	0.77	500' & 1,000'	65	420
PTJ4/3	4 (19 str)		0.060	0.060	0.87	Bulk	85	600

THREE CONDUCTORS WITH GROUND

PTJ12/3GG	12 (7 str)	12 (7 str)	0.045	0.045	0.53	500' & 1,000'	20	174
PTJ10/3GG	10 (7 str)	10 (7 str)	0.045	0.045	0.58	500' & 1,000'	30	236
PTJ8/3GG	8 (7 str)	10 (7 str)	0.060	0.045	0.72	500' & 1,000'	50	336
PTJ6/3GG	6 (19 str)	8 (19 str)	0.060	0.045	0.81	500' & 1,000'	65	482
PTJ4/3GG	4 (19 str)	8 (19 str)	0.060	0.060	0.96	500' & 1,000'	85	687
PTJ2/3GG	2 (19 str)	6 (19 str)	0.060	0.060	1.09	Bulk	115	995

§Per NEC Table 310.15 (B)(16).
#1 AWG through 4/0 AWG round jacketed pump available upon request.
NOTE: Direct burial rated upon request.
NOTE: The data shown is approximate and subject to standard industry tolerances.

servicewire.com
Phoenix, AZ 877-623-9473
Culloden, WV 800-624-3572
Houston, TX 800-231-9473

RETURN to Table of Contents

ServiceWire Co.
Manufacturing quality. Delivering service.
Made in the USA
ISO 9001:2008

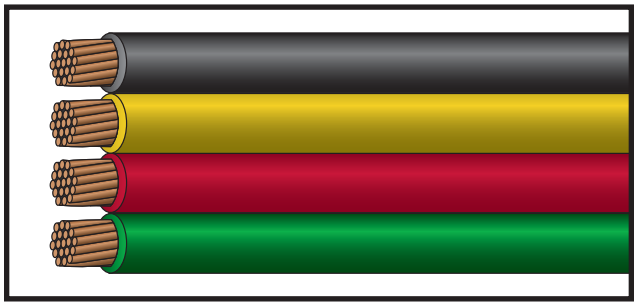

THW/Rainbow Wire® Submersible Pump Cable

Flat with Ground
600 Volt Copper

Description:
Stranded copper conductors are insulated with color coded PVC (type THW) and bonded together with green insulated ground, configured flat and parallel with no overall jacket.

Application:
Suitable for use within the well casing to supply power to the pump and where flexibility during installation and operation are required.

Specifications & Standards:
UL 83 and UL1581
Temperature Rated at 75ºC Wet/Dry
Oil, Grease and Abrasion Resistant
Color Code: Black, Red, Yellow, Green (ground)
RoHS Compliant

TWO OR THREE CONDUCTORS WITH GROUND

Part Number	Conductor Size, AWG		Dimensions (inches)		Standard Packaging	Ampacity NEC§	Weight (lb/1000')
	Power	Ground	Insulation	O.D.			
PRB12/2GG	12/2 (7 str)	12 (7 str)	0.045	0.18 x 0.55	500' & 1000'	20	97
PRB10/2GG	10/2 (7 str)	10 (7 str)	0.045	0.21 x 0.61	500' & 1000'	30	139
PRB8/2GG	8/2 (7 str)	10 (7 str)	0.060	0.27 x 0.79	500' & 1000'	50	210
PRB12/3GG	12/3 (7 str)	12 (7 str)	0.045	0.18 x 0.73	500' & 1000'	20	130
PRB10/3GG	10/3 (7 str)	10 (7 str)	0.045	0.21 x 0.82	500' & 1000'	30	185
PRB8/3GG	8/3 (7 str)	10 (7 str)	0.060	0.27 x 1.05	500' & 1000'	50	285
PRB6/3GG	6/3 (19 str)	8 (7 str)	0.060	0.30 x 1.21	500' & 1000'	65	415

§Per NEC Table 310.15 (B)(16).
NOTE: The data shown is approximate and subject to standard industry tolerances.

servicewire.com
Phoenix, AZ 877-623-9473
Culloden, WV 800-624-3572
Houston, TX 800-231-9473

ServiceWire Co.
Manufacturing quality. Delivering service.
Made in the USA
ISO 9001: 2008

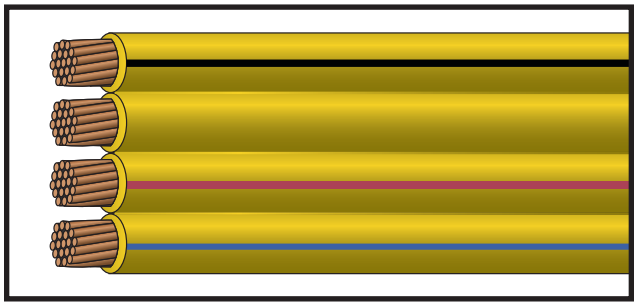

THW/Flat Yellow Submersible Pump Cable

600 Volt Copper

Description:
Stranded copper conductors are insulated with yellow PVC (type THW) and bonded together with yellow insulated ground, configured flat and parallel with no overall jacket.

Application:
Suitable for use within the well casing to supply power to the pump and where flexibility during installation and operation are required.

Specifications & Standards:
UL 83
Temperature Rated at 75ºC Wet/Dry
Oil, Grease and Abrasion Resistant
Color Code: K-2 Stripes
RoHS Compliant

TWO OR THREE CONDUCTORS WITH GROUND

Part Number	Conductor Size, AWG		Dimensions (inches)		Standard Packaging	Ampacity NEC§	Weight (lb/1000')
	Power	Ground	Insulation	O.D.			
PYW14/2GG	14/2 (7 str)	14 (7 str)	0.045	0.17 x 0.53	500' & 1000'	15	69
PYW12/2GG	12/2 (7 str)	12 (7 str)	0.045	0.19 x 0.57	500' & 1000'	20	96
PYW10/2GG	10/2 (7 str)	10 (7 str)	0.045	0.21 x 0.66	500' & 1000'	30	138
PYW8/2GG	8/2 (7 str)	8 (7 str)	0.060	0.27 x 0.79	500' & 1000'	50	210
PYW6/2GG	6/2 (7 str)	6 (7 str)	0.060	0.31 x 0.92	500' & 1000'	65	401
PYW14/3GG	14/3 (7 str)	14 (7 str)	0.045	0.17 x 0.72	500' & 1000'	15	91
PYW12/3GG	12/3 (7 str)	12 (7 str)	0.045	0.19 x 0.75	500' & 1000'	20	128
PYW10/3GG	10/3 (7 str)	10 (7 str)	0.045	0.21 x 0.84	500' & 1000'	30	184
PYW8/3GG	8/3 (7 str)	10 (7 str)	0.060	0.27 x 1.06	500' & 1000'	50	269
PYW6/3GG	6/3 (7 str)	8 (7 str)	0.060	0.31 x 1.23	500' & 1000'	65	401
PYW4/3GG	4/3 (7 str)	8 (7 str)	0.060	0.35 x 1.32	500' & 1000'	85	561

§Per NEC Table 310.15 (B)(16).
NOTE: The data shown is approximate and subject to standard industry tolerances.

servicewire.com
Phoenix, AZ 877-623-9473
Culloden, WV 800-624-3572
Houston, TX 800-231-9473

RETURN to Table of Contents

ServiceWire Co.
Manufacturing quality. Delivering service.
Made in the USA
ISO 9001: 2008

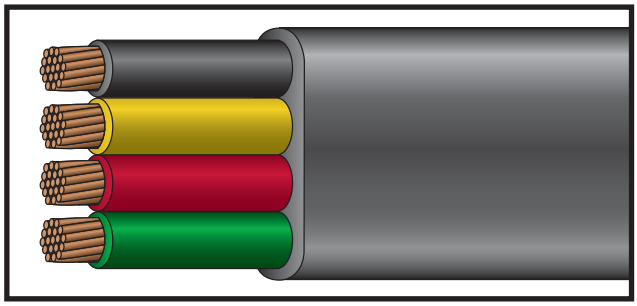

THW/Submersible Pump Cable

Heavy Duty Flat Jacketed with Ground 600 Volt Copper

Description:
Stranded copper conductors are insulated with color coded PVC (type THW) and configured flat and parallel with green insulated ground and overall PVC jacket applied directly over the conductors with a non-penetrating web.

Application:
Suitable for use within the well casing to supply power to the submersible pump and where extra mechanical protection and flexibility during installation and operation are required.

Standards:
UL Standard 83
Temperature Rated at 75ºC Wet/Dry
Color Code: Black, Red, Yellow, Green (ground)
Printed Number and Color (1/0 and larger)
Acid, Alkali, Oil, Grease, Abrasion and Crush Resistant
Weather, Ozone and Sunlight Resistant Jacket
RoHS Compliant

THREE CONDUCTORS WITH GREEN INSULATED GROUNDING CONDUCTORS

Part Number	Conductor Size, AWG or Kcmil		Dimensions (inches)			Standard Packaging	Ampacity NEC§	Weight (lb/1000')
	Power	Ground	Insulation	Jacket	O.D.			
PFB14/3GG	14/3 (7 str)	14 (7 str)	0.045	0.045	0.25 x 0.74	500' & 1000'	15	147
PFB12/3GG	12/3 (19 str)	12 (19 str)	0.045	0.045	0.27 x 0.82	500' & 1000'	20	192
PFB10/3GG	10/3 (19 str)	10 (19 str)	0.045	0.045	0.30 x 0.91	500' & 1000'	30	258
PFB8/3GG	8/3 (19 str)	10 (19 str)	0.060	0.045	0.35 x 1.08	500' & 1000'	50	376
PFB6/3GG	6/3 (19 str)	8 (19 str)	0.060	0.045	0.39 x 1.26	500' & 1000'	65	528
PFB4/3GG	4/3 (19 str)	8 (19 str)	0.060	0.045	0.44 x 1.40	500' & 1000'	85	726
PFB2/3GG	2/3 (19 str)	6 (19 str)	0.060	0.045	0.49 x 1.60	500' & 1000'	115	1,049
PFB1/03GG	1/03 (19 str)	6 (7 str)	0.080	0.060	0.64 x 1.97	Bulk	150	1,632
PFB2/03GG	2/03 (19 str)	6 (7 str)	0.080	0.060	0.68 x 2.11	Bulk	175	1,958
PFB3/03GG	3/03 (19 str)	4 (7 str)	0.080	0.060	0.73 x 2.30	Bulk	200	2,410
PFB4/03GG	4/03 (19 str)	4 (7 str)	0.080	0.060	0.79 x 2.48	Bulk	230	2,917
PFB250/3GG	250/3 (37 str)	4 (7 str)	0.095	0.080	0.92 x 2.80	Bulk	255	3,529
PFB350/3GG	350/3 (37 str)	3 (7 str)	0.095	0.080	1.03 x 3.13	Bulk	310	4,701
PFB500/3GG	500/3 (37 str)	2 (7 str)	0.095	0.080	1.15 x 3.52	Bulk	380	6,394

TWO CONDUCTORS WITH GREEN INSULATED GROUNDING CONDUCTORS

PFB14/2GG	14/2 (7 str)	14 (7 str)	0.045	0.045	0.25 x 0.58	Bulk	15	114
PFB12/2GG	12/2 (19 str)	12 (19 str)	0.045	0.045	0.27 x 0.64	500' & 1000'	20	154
PFB10/2GG	10/2 (19 str)	10 (19 str)	0.045	0.045	0.30 x 0.71	500' & 1000'	30	212
PFB8/2GG	8/2 (19 str)	10 (19 str)	0.060	0.045	0.35 x 0.82	500' & 1000'	50	278

§Per NEC Table 310.15 (B)(16).
NOTE: The data shown is approximate and subject to standard industry tolerances.
*Direct Burial rated in sizes 12 through 500 KCMIL, upon request

servicewire.com
Phoenix, AZ 877-623-9473
Culloden, WV 800-624-3572
Houston, TX 800-231-9473

RETURN to Table of Contents

ServiceWire Co.
Manufacturing quality. Delivering service.
Made in the USA
ISO 9001: 2008

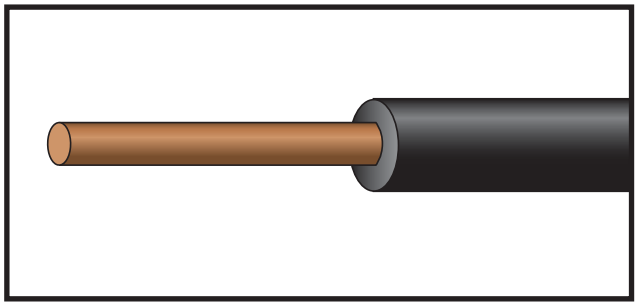

UF / Type TWU

600 Volt Copper

Description:
Solid (#18 AWG to #8 AWG) or stranded (#6 AWG to 4/0 AWG), soft annealed copper conductor insulated with PVC.

Application:
Suitable for use as sprinkler irrigation control wire for general purpose lighting, power and control conductors for irrigation systems. For use in accordance per NEC Article 339.

Standards:
UL 493 and UL1581
CSA C22.2 #75
UL Listed: Type UF 600V (#14 AWG - 4/0 AWG)
C(UL) Listed: Type TWU 600V (#14 AWG - 4/0 AWG)
Federal Spec. AA-59544
Temperature Rated at 60ºC Wet/Dry
Acid, Alkali, Grease, Chemical, Abrasion, Crush and Moisture Resistant
Direct Burial
RoHS Compliant

Part Number	Conductor AWG	Dimensions (inches)		Standard Packaging			Weight (lb/1000')
		Insulation	O.D.	500'	1000'	2500'	
ULE18	18 (solid)	0.045	0.13	X		X	13
ULE16	16 (solid)	0.045	0.14	X		X	16
UF14	14 (solid)	0.060	0.18	X	X	X	27
UF12	12 (solid)	0.060	0.20	X		X	36
UF10	10 (solid)	0.060	0.22			X	50
UF8	8 (solid)	0.080	0.29			X	82
UF6	6 (7 str)	0.080	0.34		X	Bulk	120
UF4	4 (7 str)	0.080	0.39		X	Bulk	175
UF2	2 (7 str)	0.080	0.44		X	Bulk	258
UF1/0	1/0 (19 str)	0.095	0.55			Bulk	407
UF2/0	2/0 (19 str)	0.095	0.59			Bulk	500
UF4/0	4/0 (19 str)	0.095	0.70			Bulk	762

*UL Listed - Underground Low Energy 150 Volt Circuit Cable Sunlight Resistant.
NOTE: The data shown is approximate and subject to standard industry tolerances.

STANDARD COLORS	RD	WE	BE	GN	YW	OE	BN	BK	PE	GY	PK	TN
Single Conductor #18 AWG and #16 AWG	S	S	S	S	A	A	A	S	A	A	A	A
Single Conductor #14 AWG	S	S	S	S	S	S	S	S	S	A	A	A
Single Conductor #12 AWG	S	S	S	S	S	A	A	S	S	A	A	A
Single Conductor #10 AWG	A	S	S	S	A	A	A	A	A	A	A	A
Single Conductor #8 AWG and Larger	A	A	A	A	A	A	A	A	A	A	A	A

NOTE: S = Stock, A = Available

servicewire.com
Phoenix, AZ 877-623-9473
Culloden, WV 800-624-3572
Houston, TX 800-231-9473

RETURN to Table of Contents

ServiceWire Co.
Manufacturing quality. Delivering service.
Made in the USA
ISO 9001:2008

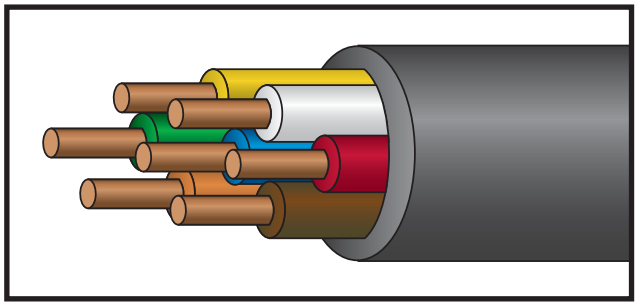

Sprinkler Control Cable

30 Volt Copper

Description:
Soft annealed solid copper, insulated with colored PVC, cabled with and jacketed with black HMW-PE (nylon rip cord under jacket).

Application:
Suitable for use as control cable for commercial and residential irrigation systems.

Standards:
UL Listed
Temperature Rated at 60ºC Wet/Dry
Acid, Alkali, Grease, Chemical, Abrasion, Crush, Moisture and Sunlight Resistant
Underground Use
RoHS Compliant

Part Number	Conductor (solid)		Dimensions (inches)			Standard Packaging					Weight (lb/1000')
	AWG	No.	Insulation	Jacket	O.D.	100'	250'	500'	1000'	2500'	
SPR18/2	18	2	0.020	0.030	0.14 x 0.22		X	X	X		23
SPR18/3	18	3	0.020	0.030	0.23	X	X	X	X		30
SPR18/4	18	4	0.020	0.030	0.25			X			38
SPR18/5	18	5	0.020	0.030	0.27	X	X	X	X		47
SPR18/6	18	6	0.020	0.030	0.30			X			55
SPR18/7	18	7	0.020	0.030	0.30	X	X	X	X		62
SPR18/8	18	8	0.020	0.030	0.33		X	X			71
SPR18/9	18	9	0.020	0.030	0.35						79
SPR18/10	18	10	0.020	0.030	0.37	X	X	X	X		87
SPR18/12	18	12	0.020	0.030	0.39						103
SPR18/13	18	13	0.020	0.030	0.40		X	X	X		110

NOTE: The data shown is approximate and subject to standard industry tolerances.

	RD	WE	BE	GN	YW	OE	BN	BK	PE	GY	PK	TN	DK BE
Color Sequence	1	2	3	4	5	6	7	8	9	10	11	12	13

servicewire.com
Phoenix, AZ 877-623-9473
Culloden, WV 800-624-3572
Houston, TX 800-231-9473

RETURN to Table of Contents

ServiceWire Co.
Manufacturing quality. Delivering service.
Made in the USA
ISO 9001: 2008

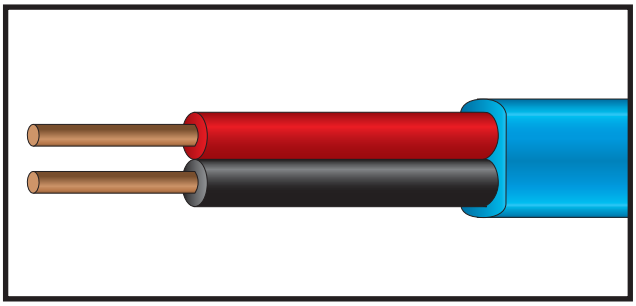

Decoder Control Cable

HD-PE Jacketed UF Copper

Description:
Two solid copper conductors, insulated with 60 mils of flame retardant PVC. Cable jacketed with moisture resistant HD-PE jacket in various colors.

Application:
Suitable for use in Irrigation Control Circuits.

Standards:
UL 493 (conductors)
ICEA S-61-402/NEMA WC-5
Sunlight Resistant
Direct Burial
Color Code: Black and Red
RoHS Compliant

Part Number	Conductors (No.)	Strands (No.)	Insulation Thickness (mils)	Jacket Thickness (mils)	Diameter (inches)	Approx. Net Weight (lb/1000')
DEC 14/2	2	1	60	45	0.27 x 0.46	79
DEC 12/2	2	1	60	45	0.29 x 0.49	100

NOTE: The data shown is approximate and subject to standard industry tolerances.

servicewire.com
Phoenix, AZ 877-623-9473
Culloden, WV 800-624-3572
Houston, TX 800-231-9473

RETURN to Table of Contents

ServiceWire Co.
Manufacturing quality. Delivering service.
Made in the USA

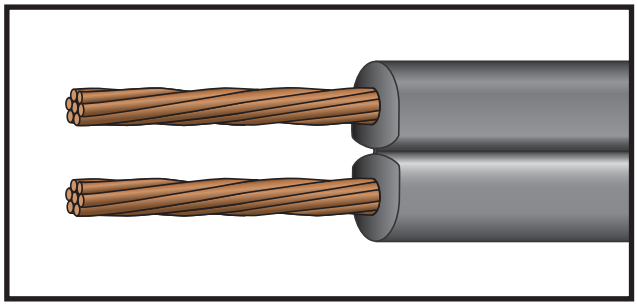

Underground Landscape Lighting Low Energy Circuit Cable

30/150 Volt Copper

Description:
Extra flexible stranded copper conductors, configured flat and parallel with black PVC jacket. Conductors identified with ridges on the surface of the insulation.

Application:
Suitable for use in direct burial landscaping and lighting applications.

Standards:
ASTM Standards:
- B-174 (#16 AWG - #10 AWG)
- B-172 (#8 AWG)

UL 1493
Temperature Rated at 60ºC Wet/Dry
Acid, Alkali, Grease, Chemical, Abrasion, Crush, Oil, Moisture, Sunlight and Abrasion Resistant
Direct Burial
RoHS Compliant

LOW ENERGY CIRCUIT CABLE; UNDERGROUND LANDSCAPE LIGHTING WIRE 60°C/30V

Part Number	Conductor (solid)		Dimensions (inches)		Standard Packaging	Weight (lb/1000')
	AWG	No.	Insulation	O.D		
ULE16/2	16/2	26	0.045	0.30 x 0.15	500’	34
ULE14/2	14/2	41	0.045	0.33 x 0.16	100’, 500’	46
ULE12/2	12/2	65	0.045	0.30 x 0.18	100’, 250’, 500’, 1,000’	64
ULE10/2	10/2	104	0.045	0.41 x 0.21	100’, 250’, 500’, 1,000’	91
ULE8/2	8/2	168	0.060	0.53 x 0.26	100’, 500’	147

NOTE: The data shown is approximate and subject to standard industry tolerances.

servicewire.com
Phoenix, AZ 877-623-9473
Culloden, WV 800-624-3572
Houston, TX 800-231-9473

RETURN to Table of Contents

ServiceWire Co.
Manufacturing quality. Delivering service.
Made in the USA
ISO 9001: 2008

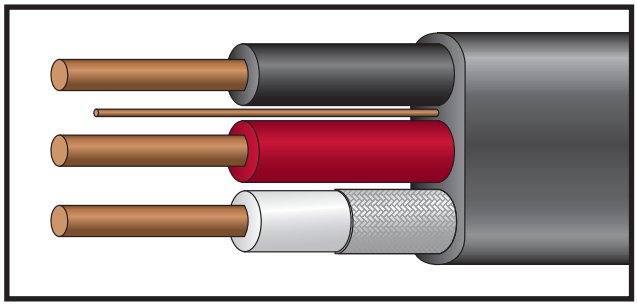

Underground Feeder Cable

UF-B
600 Volt Copper

Description:
Solid or stranded (type THHN/THWN) conductors are laid parallel with an uninsulated grounding conductor, with overall outer PVC jacket.

Application:
Permitted for use underground including direct burial in earth as Feeder or Branch Circuit Cable where provided with overcurrent protection. Suitable for use in interior wiring in wet, dry or corrosive locations under recognized wiring methods of the National Electrical Code (NEC). Acceptable for installation as a Non-Metallic Sheathed Cable in accordance with NEC Article 339-3 (4). Acceptable for use in accordance with NEC Articles 300-4(b) and 339

Standards:
UL 493
Temperature Rated at 75ºC Wet/Dry
Grease and Chemical Resistant
Moisture, Chemical and Sunlight Resistant

TWO CONDUCTORS WITH GROUND

Part Number	AWG	Dimensions (inches)			Standard Packaging			Ampacity NEC§	Weight (lb/1000')
		PVC	Nylon	O.D.					
UFB14/2G	14 (sol)	0.015	0.004	0.19 x 0.39	250' Ctn	500' Reel	1000' Reel	20	53
UFB12/2G	12 (sol)	0.015	0.004	0.20 x 0.42	250' Ctn	500' Reel	1000' Reel	20	75
UFB10/2G	10 (sol)	0.020	0.004	0.23 x 0.46	250' Ctn		1000' Reel	30	140
UFB8/2G	8 (7 str)	0.030	0.005	0.32 x 0.62			1000' Reel	40	213
UFB6/2G	6 (7 str)	0.030	0.005	0.39 x 0.80			1000' Reel	55	305

THREE CONDUCTORS WITH GROUND

UFB14/3G	14 (sol)	0.015	0.004	0.19 x 0.58	250' Ctn		1000' Reel	20	93
UFB12/3G	12 (sol)	0.015	0.004	0.20 x 0.62	250' Ctn		1000' Reel	20	134
UFB10/3G	10 (sol)	0.020	0.004	0.23 x 0.69	250' Ctn	500' Reel	1000' Reel	30	194
UFB8/3G8	8 (7 str)	0.030	0.005	0.32 x 0.99		500' Reel	1000' Reel	40	330
UFB6/3G6	6 (7 str)	0.030	0.005	0.39 x 1.20			1000' Reel	55	449

§Per NEC Table 310.15 (B)(16).
NOTE: The data shown is approximate and subject to standard industry tolerances.

servicewire.com
Phoenix, AZ 877-623-9473
Culloden, WV 800-624-3572
Houston, TX 800-231-9473

RETURN to Table of Contents

ServiceWire Co.
Manufacturing quality. Delivering service.
Made in the USA
ISO 9001:2008

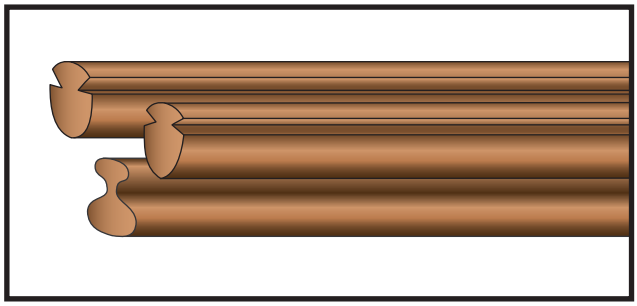

Copper Contact Wire
(for Electrified Rail Systems)

Description:
Single conductor, solid copper, having a hard drawn temper, made in the configuration of grooved, figure 8 or figure 9.

Applications:
Suitable for use as an overhead power source for electric railroad locomotives, cranes, light rail transit systems and underground mining motor cars.

Standards:
ASTM Standards:
- B-47
- B-116

RoHS Compliant

	Part Number	Nominal Conductor Size AWG or Kcmil	Overall Diameter		Area			Weight			Tensile Strength (Minimum)		Resistance (68°F/20°C)			Min. Breaking Strength	
			Inches	MM	Circular Mils	Square Inches	Square MM	Pounds/ 1000'	Pounds/ Mile	KG/KM	Pounds/ Square Inch	KG/ Square MM	OHMS/ 1000'	OHMS/ Mile	OHMS/ KM	Pounds	KG
Grooved	BGRV2/0CU	2/0	0.392	9.956	137,900	0.108	69.9	417.4	2,204	621	50,200	35.3	0.077	0.409	0.254	5,437	2,466
Grooved	BGRV3/0CU	3/0	0.430	10.922	167,300	0.131	84.8	506.4	2,674	753	48,500	34.1	0.064	0.337	0.209	6,373	2,891
Grooved	BGRV4/0CU	4/0	0.482	12.243	212,000	0.167	107.4	641.7	3,388	955	46,600	32.8	0.050	0.266	0.165	7,759	3,519
Grooved	BGRV300CU	300	0.574	14.580	299,800	0.236	151.9	907.5	4,792	1,350	44,200	31.1	0.036	0.188	0.117	10,410	4,722
Grooved	BGRV350CU	350	0.620	15.748	351,200	0.276	177.9	1063.0	5,613	1,582	42,800	30.1	0.030	0.161	0.100	11,810	5,357
FIGURE 8	BFIG81/0CU	1/0	0.420x0.312	10.7x7.9	105,600	0.083	53.5	319.7	1,687	475	51,800	36.4	0.101	0.534	0.332	4,296	1,949
FIGURE 8	BFIG82/0CU	2/0	0.480x0.352	12.2x8.9	133,100	0.105	67.4	402.9	2,127	599	50,200	35.3	0.080	0.424	0.263	5,248	2,380
FIGURE 8	BFIG83/0CU	3/0	0.510x0.400	13.7x10.2	167,800	0.132	85.0	507.9	2,682	755	48,500	34.1	0.064	0.336	0.209	6,392	2,899
FIGURE 8	BFIG84/0CU	4/0	0.600x0.450	15.2x11.1	211,600	0.166	107.2	640.5	3,382	953	46,600	32.8	0.051	0.266	0.166	7,744	3,513
FIGURE 8	BFIG8350CU	350	0.754x0.570	19.2x14.5	350,100	0.275	177.4	1060.0	5,595	1,577	42,800	30.1	0.031	0.161	0.100	11,770	5,339
FIG. 9	BFIG9350CU	350	0.707x0.496	17.9x12.6	348,900	0.274	176.8	1056.0	5,576	1,571	42,800	30.1	0.031	0.162	0.100	11,730	5,321
FIG. 9	BFIG9400CU	400	0.715x0.522	18.9x14.0	397,200	0.312	201.3	1202.0	6,348	1,789	41,300	29.0	0.027	0.142	0.088	12,880	5,842

NOTE: The data shown is approximate and subject to standard industry tolerances.

servicewire.com
Phoenix, AZ 877-623-9473
Culloden, WV 800-624-3572
Houston, TX 800-231-9473

ServiceWire Co.
Manufacturing quality. Delivering service.

ISO 9001: 2008

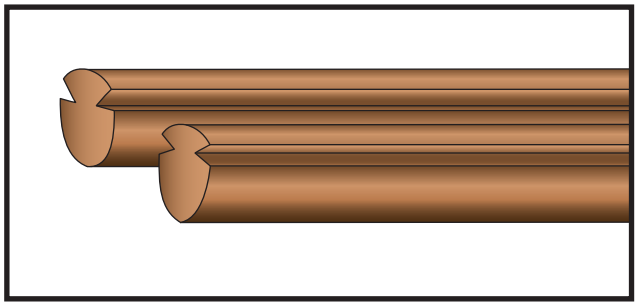

Bronze-Magnesium Contact Wire
(for Electrified Rail Systems)

Description:
Single conductor, solid magnesium, having a hard drawn temper, made in the configuration of grooved.

Application:
Overhead catenary system used as power for light rail systems, cranes, electric railroad locomotives and underground mining cars.

Standards:
ASTM B-9

	Part Number	Nominal Conductor Size AWG or Kcmil	Overall Diameter		Area			Weight			Tensile Strength (Minimum)		Resistance (68°F/20°C)			Min. Breaking Strength	
			Inches	MM	Circular Mils	Square Inches	Square MM	Pounds/ 1000'	Pounds/ Mile	KG/ KM	Pounds/ Square Inch	KG/ Square MM	OHMS/ 1000'	OHMS/ Mile	OHMS/ KM	Pounds	KG
Grooved ALLOY 80	BGRV2/0MG80	2/0	0.392	9.957	137,948	0.108	69.9	430	2,272	640.46	76,362	53.69	0.101	0.532	0.331	7,012	3,180
	BGRV3/0MG80	3/0	0.430	10.922	167,353	0.131	84.8	522	2,757	776.98	62,945	44.25	0.083	0.439	0.273	8,506	3,858
	BGRV4/0MG80	4/0	0.459	11.670	211,165	0.166	107.0	659	3,477	980.00	63,820	44.87	0.066	0.348	0.216	10,274	4,660
	BGRV300MG80	300	0.544	13.820	296,025	0.233	150.0	923	4,875	1,374.00	60,919	42.83	0.047	0.248	0.154	13,735	6,230
	BGRV350MG80	350	0.620	15.748	351,200	0.276	166.3	1,063	5,613	1,582.00	59,500	41.80	0.037	0.195	0.121	16,410	7,414
GROOVED ALLOY 55	BGRV20MG55	2/0	0.392	9.957	137,948	0.108	69.9	430	2,272	640.46	86,325	60.69	0.134	0.709	0.441	7,936	3,600
	BGRV3/0MG55	3/0	0.430	10.922	167,353	0.131	84.8	522	2,757	776.98	71,157	50.03	0.111	0.585	0.363	9,628	4,367
	BGRV4/0MG55	4/0	0.459	11.670	211,165	0.166	107.0	659	3,477	980.00	72,525	50.99	0.082	0.431	0.268	11,667	5,292
	BGRV300MG55	300	0.544	13.820	296,025	0.233	150.0	923	4,875	1,374.00	68,172	47.93	0.058	0.307	0.191	15,377	6,975
	BGRV350MG55	350	0.620	15.748	351,200	0.276	166.3	1,063	5,613	1,582.00	62,500	43.90	0.054	0.283	0.176	17,240	7,820
FIG. 9 55	BFIG9335MG55	336.4 Kcmil	680 x .482	17.3 x 12.2	336,400	0.264	170.4	1,018	5,377	1,515.00	61,500	43.20	0.056	0.296	0.184	16,250	7,371

NOTE: The data shown is approximate and subject to standard industry tolerances.

servicewire.com
Phoenix, AZ 877-623-9473
Culloden, WV 800-624-3572
Houston, TX 800-231-9473

RETURN to Table of Contents

ServiceWire Co.
Manufacturing quality. Delivering service.

ISO 9001:2008

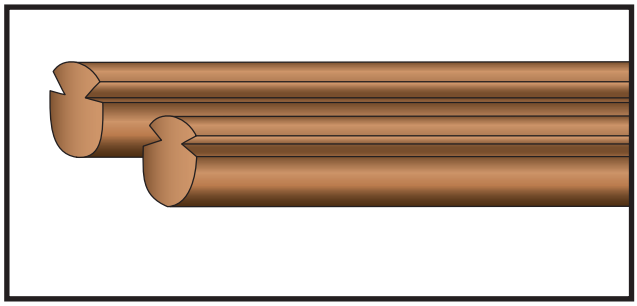

Bronze-Tin Contact Wire
(for Electrified Rail Systems)

Description:
Single conductor, solid tin, having a hard drawn temper, made in the configuration of grooved.

Applications:
Overhead catenary system used as power for light rail systems, cranes, electric railroad locomotives and underground mining cars.

Standards:
ASTM B-9

	Part Number	Nominal Conductor Size AWG or Kcmil	Overall Diameter		Area			Weight			Tensile Strength (Minimum)		Resistance (68°F/20°C)			Min. Breaking Strength	
			Inches	MM	Circular Mils	Square Inches	Square MM	Pounds/ 1000'	Pounds/ Mile	KG/ KM	Pounds/ Square Inch	KG/ Square MM	OHMS/ 1000'	OHMS/ Mile	OHMS/ KM	Pounds	KG
Grooved ALLOY 80	BGRV2/0SN80	2/0	0.376	9.557	137,900	0.108	69.9	417.4	2204	621	69,000	48.50	0.094	0.496	0.309	7,473	3,390
	BGRV3/0SN80	3/0	0.430	10.922	167,300	0.131	84.8	506.0	2674	753	67,000	47.10	0.077	0.409	0.254	8,804	3,993
	BGRV4/0SN80	4/0	0.459	11.670	211,165	0.166	107.0	661.0	3488	983	63,820	44.87	0.070	0.372	0.231	10,274	4,660
	BGRV300SN80	300	0.544	13.820	296,025	0.233	150.0	926.0	4889	1378	60,919	42.83	0.050	0.266	0.165	13,735	6,230
	BGRV350SN80	350	0.620	15.748	351,200	0.276	166.3	1,063	5,613	1,582.00	59,500	41.80	0.037	0.195	0.121	16,410	7,414
	BFIG9335SN80	336.4 Kcmil	0.680 x 0.482	17.3 x 12.2	336,400	0.264	170.4	1018.0	5377	1515	56,800	39.90	0.039	0.205	0.127	15,010	6,809

NOTE: The data shown is approximate and subject to standard industry tolerances.

servicewire.com

Phoenix, AZ
877-623-9473

Culloden, WV
800-624-3572

Houston, TX
800-231-9473

ServiceWire Co.
Manufacturing quality. Delivering service.
Made in the USA
ISO 9001: 2008

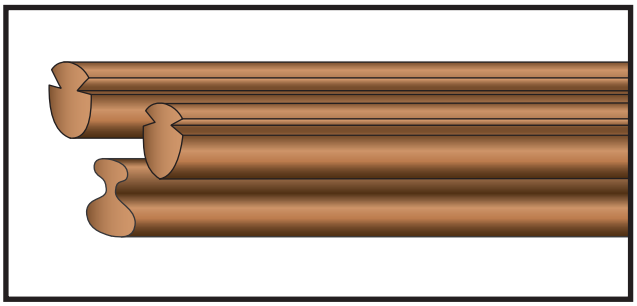

Silver-Bearing Contact Wire
(for Electrified Rail Systems)

Description:
Single conductor, silver-bearing, having a hard drawn temper, made in the configuration of grooved.

Applications:
Overhead catenary system used as power for light rail systems, cranes, electric railroad locomotives and underground mining cars.

Standards:
ASTM B-47

	Part Number	Nominal Conductor Size AWG or Kcmil	Overall Diameter		Area			Weight			Tensile Strength (Minimum)		Resistance (68°F/20°C)			Min. Breaking Strength	
			Inches	MM	Circular Mils	Square Inches	Square MM	Pounds/ 1000'	Pounds/ Mile	KG/KM	Pounds/ Square Inch	KG/ Square MM	OHMS/ 1000'	OHMS/ Mile	OHMS/ KM	Pounds	KG
Grooved	BGRV2/0AG	2/0 AWG	0.392	9.957	137,900	0.108	69.9	418.0	2,205	621	53,000	37.3	0.077	0.409	0.254	5,740	2,600
Grooved	BGRV3/0AG	3/0 AWG	0.430	10.922	167,300	0.131	84.8	506.0	2,674	755	52,700	37.1	0.064	0.337	0.209	6,920	3,140
Grooved	BGRV4/0AG	4/0 AWG	0.482	12.243	212,000	0.167	107.4	642.0	3,389	955	51,300	36.1	0.050	0.266	0.165	8,540	3,870
Grooved	BGRV300AG	300 Kcmil	0.574	14.580	299,800	0.236	151.9	908.0	4,792	1,350	48,000	33.7	0.036	0.188	0.117	11,300	5,130
Grooved	BGRV350AG	350 Kcmil	0.620	15.748	351,200	0.276	177.9	1,063.0	5,613	1,581	44,600	31.4	0.030	0.161	0.100	12,300	5,580
Grooved	BFIG81/0AG	1/0 AWG	0.420 x 0.312	10.7 x 7.9	105,600	0.083	53.5	319.7	1,687	475	51,800	36.4	0.101	0.534	0.332	4,296	1,949
Grooved	BFIG82/0AG	2/0 AWG	0.480 x 0.352	12.2 x 8.9	133,100	0.105	67.4	402.9	2,127	599	50,200	35.3	0.080	0.424	0.263	5,248	2,380
Grooved	BFIG83/0AG	3/0 AWG	0.510 x 0.400	13.7 x 10.2	167,800	0.132	85.0	507.9	2,682	755	48,500	34.1	0.064	0.336	0.209	6,392	2,899
Grooved	BFIG84/0AG	4/0 AWG	0.600 x 0.450	15.2 x 11.1	211,600	0.166	107.2	640.5	3,382	953	46,600	32.8	0.051	0.266	0.166	7,744	3,513
Grooved	BFIG8350AG	350 Kcmil	0.754 x 0.570	19.2 x 14.5	350,100	0.275	177.4	1,060.0	5,595	1,577	42,800	30.1	0.031	0.161	0.100	11,770	5,339
FIG. 9	BFIG9350AG	350 Kcmil	0.707 x 0.496	17.9 x 12.6	348,900	0.274	176.8	1,056.0	5,576	1,571	42,800	30.1	0.031	0.162	0.100	11,730	5,321
FIG. 9	BFIG9400AG	400 Kcmil	0.715 x 0.552	18.9 x 14.0	397,200	0.312	201.3	1,202.0	6,348	1,789	41,300	29.0	0.027	0.142	0.088	12,880	5,842

NOTE: The data shown is approximate and subject to standard industry tolerances.

servicewire.com
Phoenix, AZ 877-623-9473
Culloden, WV 800-624-3572
Houston, TX 800-231-9473

RETURN to Table of Contents

Service Wire Co.
Manufacturing quality. Delivering service.
Made in the USA
ISO 9001:2008

Messengers For Aerial Cable

COPPERWELD - EHS, 30% CONDUCTIVITY

MES(size)CUWELD	Size	O.D.	Stranding (no.)	Breaking Strength	Weight (lb/1000')
MES1/4CUWELD	1/4"	0.242	7	5,783 lbs.	128
MES5/16CUWELD	5/16"	0.306	7	9,196 lbs.	204
MES3/8CUWELD	3/8"	0.385	7	13,890 lbs.	324
MES1/2CUWELD	1/2"	0.486	7	20,460 lbs.	515
MES9/16CUWELD	9/16"	0.546	7	24,650 lbs.	650

GALVANIZED - EHS

MES(size)EHSGAL	Size	O.D.	Stranding (no.)	Breaking Strength	Weight (lb/1000')
MES1/4EHSGAL	1/4"	0.242	7	6,650 lbs.	121
MES5/16EHSGAL	5/16"	0.306	7	11,200 lbs.	205
MES3/8EHSGAL	3/8"	0.385	7	15,400 lbs.	273
MES1/2EHSGAL	1/2"	0.486	7	26,900 lbs.	517

STAINLESS STEEL - TYPE “302”

MES(size)SS	Size	O.D.	Stranding (no.)	Breaking Strength	Weight (lb/1000')
MES1/4SS	1/4"	0.242	7	8,500 lbs.	135
MES3/8SS	3/8"	0.385	7	18,000 lbs.	282
MES1/2SS	1/2"	0.486	7	33,700 lbs.	535

NOTE: The data shown is approximate and subject to standard industry tolerances.

Service Wire Company believes the information presented herein is, to the best of our knowledge, true and accurate based on currently available industry data. However no warranties, either expressed or implied, are made as to the accuracy or completeness of any information contained herein. Consequently, Service Wire Company makes no guarantee of the results and assumes no obligation or liability whatsoever in connection with this information.

servicewire.com

Phoenix, AZ
877-623-9473

Culloden, WV
800-624-3572

Houston, TX
800-231-9473

RETURN to Table of Contents

Service Wire Co.
Manufacturing quality. Delivering service.
Made in the USA
ISO 9001:2008

Common Color Codes

ICEA Method 1 Table E-1 ("K1")
(Colored Compounds with Stripes)

Conductor Number	Conductor Color	Stripe Color
1	Black	-
2	White	-
3	Red	-
4	Green	-
5	Orange	-
6	Blue	-
7	White	Black
8	Red	Black
9	Green	Black
10	Orange	Black
11	Blue	Black
12	Black	White
13	Red	White
14	Green	White
15	Blue	White
16	Black	Red
17	White	Red
18	Orange	Red
19	Blue	Red
20	Red	Green
21	Orange	Green

ICEA Method 1 Table E-2 (“K2”)
(Colored Compounds with Stripes)

Conductor Number	Conductor Color	Stripe Color
1	Black	-
2	Red	-
3	Blue	-
4	Orange	-
5	Yellow	-
6	Brown	-
7	Red	Black
8	Blue	Black
9	Orange	Black
10	Yellow	Black
11	Brown	Black
12	Black	Red
13	Blue	Red
14	Orange	Red
15	Yellow	Red
16	Brown	Red
17	Black	Blue
18	Red	Blue
19	Orange	Blue
20	Yellow	Blue
21	Brown	Blue

ICEA Method 4
(Black Compound with Numbers)

Conductor Number	Printing	Conductor Number	Printing
1	1-One	12	12-Twelve
2	2-Two	13	13-Thirteen
3	3-Three	14	14-Fourteen
4	4-Four	15	15-Fifteen
5	5-Five	16	16-Sixteen
6	6-Six	17	17-Seventeen
7	7-Seven	18	18-Eighteen
8	8-Eight	19	19-Nineteen
9	9-Nine	20	20-Twenty
10	10-Ten	21	21-Twenty-One
11	11-Eleven		

Service Wire Company believes the information presented herein is, to the best of our knowledge, true and accurate based on currently available industry data. However no warranties, either expressed or implied, are made as to the accuracy or completeness of any information contained herein. Consequently, Service Wire Company makes no guarantee of the results and assumes no obligation or liability whatsoever in connection with this information.

servicewire.com
Phoenix, AZ 877-623-9473
Culloden, WV 800-624-3572
Houston, TX 800-231-9473

RETURN to Table of Contents

ServiceWireCo.
Manufacturing quality. Delivering service.
Made in the USA
ISO 9001:2008

Minimum Bending Radii for Cables

Power and Control Cables Without Metallic Shielding or Armor

Insulation Thickness (Inches)	Overall Diameter of Cable (inches)		
	1.000" & less	1.001" - 2.000"	2.001" & over
0.169" & less	Minimum Bending Radius as a Multiple of Cable Diameter		
	4	5	6

Power & Control Cables With Metallic Shielding and/or Armor

Cable Description	Minimum Bending Radius as a Multiple of Cable Diameter
Interlocked Armor (with non-shielded conductors)	7
Metallic Tape Shielded (conductors or cable)	12/7[1]

(1) 12 x individual shielded conductor diameter, or 7 x overall cable diameter, whichever is greater
Above tables per ICEA S-95-658/NEMA WC70, Appendix F

Service Wire Company believes the information presented herein is, to the best of our knowledge, true and accurate based on currently available industry data. However no warranties, either expressed or implied, are made as to the accuracy or completeness of any information contained herein. Consequently, Service Wire Company makes no guarantee of the results and assumes no obligation or liability whatsoever in connection with this information.

servicewire.com
Phoenix, AZ 877-623-9473
Culloden, WV 800-624-3572
Houston, TX 800-231-9473

RETURN to Table of Contents

Maximum Pulling Tensions

1. Pulling Eye

Maximum pulling tension for use with a pulling eye can be determined from the following formula:

Tmax = k x n x CA

Where:

k =	0.008 for copper 0.006 for aluminum
n =	number of conductors
CA =	conductor area of one conductor, in circular mils

Tmax should not exceed 6,000 lb. for a single conductor cable.
Tmax should not exceed 10,000 lb. for 2 or more conductors.

2. Pulling Grip

Maximum pulling tension when using a basket type grip should not exceed 1,000 lb. or the value determined in the above formula, whichever is smaller.

NOTE 1: Do not exceed the load stated by the manufacturer of the pulling device.

NOTE 2: Do not consider the area of neutral or grounding conductors in cable(s) when calculating maximum pulling tensions.

NOTE 3: Pulling tensions should be reduced by 20% to 40% when several conductors are being pulled simultaneously (in parallel) since the tension will not be distributed evenly among conductors.

NOTE 4: The above procedure pertains to straight pulls, and does not consider side wall loading.

Service Wire Company believes the information presented herein is, to the best of our knowledge, true and accurate based on currently available industry data. However no warranties, either expressed or implied, are made as to the accuracy or completeness of any information contained herein. Consequently, Service Wire Company makes no guarantee of the results and assumes no obligation or liability whatsoever in connection with this information.

servicewire.com

Phoenix, AZ
877-623-9473

Culloden, WV
800-624-3572

Houston, TX
800-231-9473

RETURN to Table of Contents

ServiceWireCo.
Manufacturing quality. Delivering service.
Made in the USA
ISO 9001:2008

Sheave Selection Chart

Maximum Cable Diameter per Sheave

Sheave Diameter (Inches)	Single/Multi Conductor Power (Inches)	Armor (Inches)	Control Cable (Inches)	Shielded 600 Volt Power (Inches)	MV Power Shielded (Inches)
6	0.375	0.214	0.150	0.107	0.125
12	0.984	0.563	0.940	0.281	0.328
18	1.750	1.000	0.700	0.500	0.583
24	2.453	1.402	0.981	0.701	0.818

Examples of Minimum Bend Radii

600 Volt Cable	Multiply	Sample Diameter	Calculation	Resulting Minimum Bend Radii
Less than 1"	4	0.75" O.D.	4 X 0.75	3" Radius
1" - 2"	5	1.5" O.D.	5 X 1.5	7.5" Radius
2" or Larger	6	3.0" O.D.	6 X 3	18" Radius
Interlocked Armor	7	3.0" O.D.	7 X 3	21" Radius

Pull considerations:

1. Plan direction of cable pulls to minimize tension by putting as many bends as possible early in the pull.

2. Proper setups cost initially, but will save by creating safer and easier pulls.

3. Published allowable conductor tensions are for STRAIGHT PULLS ONLY.

4. Published allowable equipment loading does not apply to the sidewall pressure of the cable pull.

Notes: 1.) You must select the sheave by radius NOT diameter.
2.) Sidewall limits for most cables are 500 lbs. per foot radius maximum.
3.) All tensions on a cable pull are additive.

Service Wire Company believes the information presented herein is, to the best of our knowledge, true and accurate based on currently available industry data. However no warranties, either expressed or implied, are made as to the accuracy or completeness of any information contained herein. Consequently, Service Wire Company makes no guarantee of the results and assumes no obligation or liability whatsoever in connection with this information.

servicewire.com

Phoenix, AZ
877-623-9473

Culloden, WV
800-624-3572

Houston, TX
800-231-9473

RETURN to Table of Contents

Service Wire Co.
Manufacturing quality. Delivering service.
Made in the USA
ISO 9001: 2008

Cable Installation Tips

Sheave strength ratings are for straight pulls only. Always refer to allowable tensions for each radius. Most single and conveyor sheaves are rated at 4,000 lbs or more, but these ratings can only be used for the pulling rope, not the cable. Single sheaves are best for guiding and supporting cable. For cable bends use conveyor sheave assemblies to control sidewall pressure.

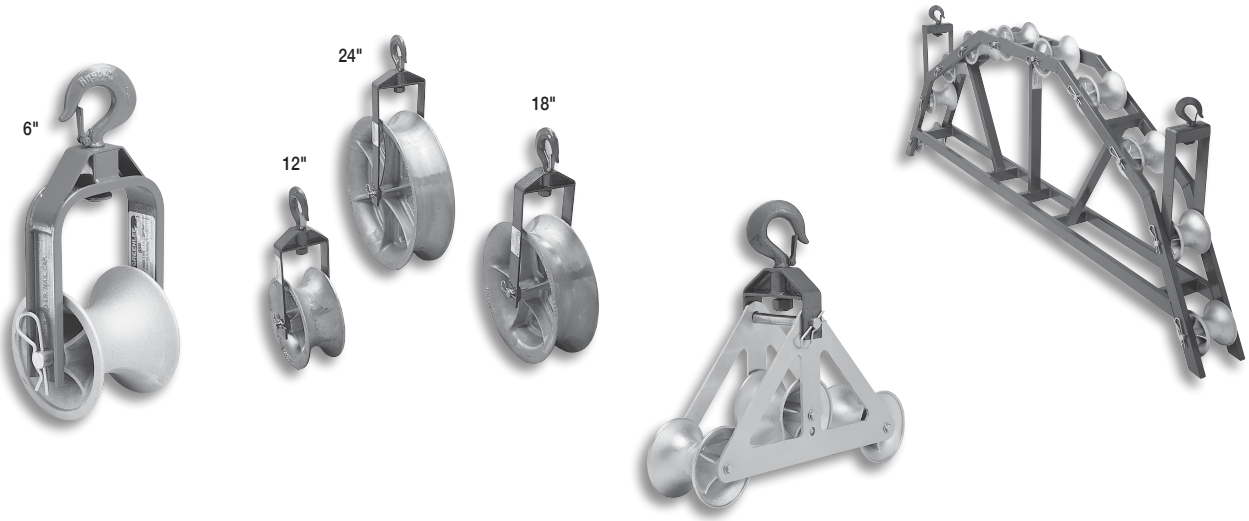

Cable damage can occur when too small of a radius wheel is used.

NOTE: When using conveyor sheave equipment, it is critical for set up that the lead and exit sheaves not have a bending radius smaller than the center wheels. (see below left)

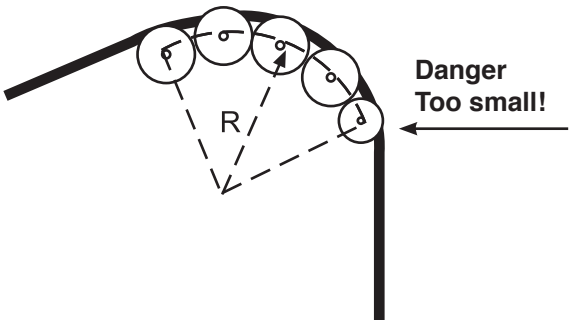

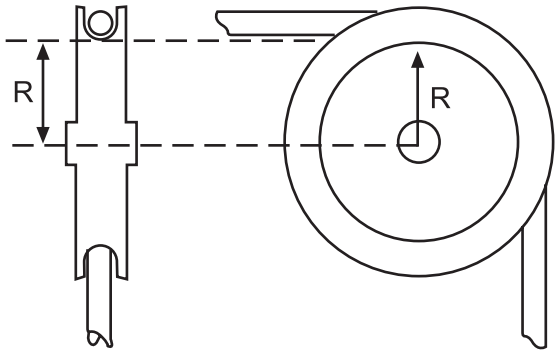

Don't confuse the diameter of the sheave with the radius. The radius MUST match the cable's bending radius.

Service Wire Company believes the information presented herein is, to the best of our knowledge, true and accurate based on currently available industry data. However no warranties, either expressed or implied, are made as to the accuracy or completeness of any information contained herein. Consequently, Service Wire Company makes no guarantee of the results and assumes no obligation or liability whatsoever in connection with this information.

servicewire.com

Phoenix, AZ
877-623-9473

Culloden, WV
800-624-3572

Houston, TX
800-231-9473

RETURN to Table of Contents

ServiceWireCo.
Manufacturing quality. Delivering service.
Made in the USA
ISO 9001:2008

Cable Installation Tips

Stringing Aerial Cables on Poles (applies to pulling in or out)

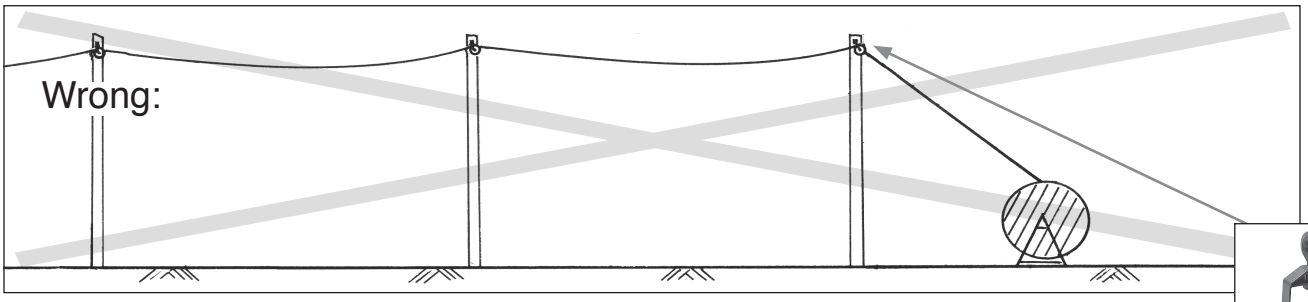

This method can cause sidewall pressure and crush the cable.

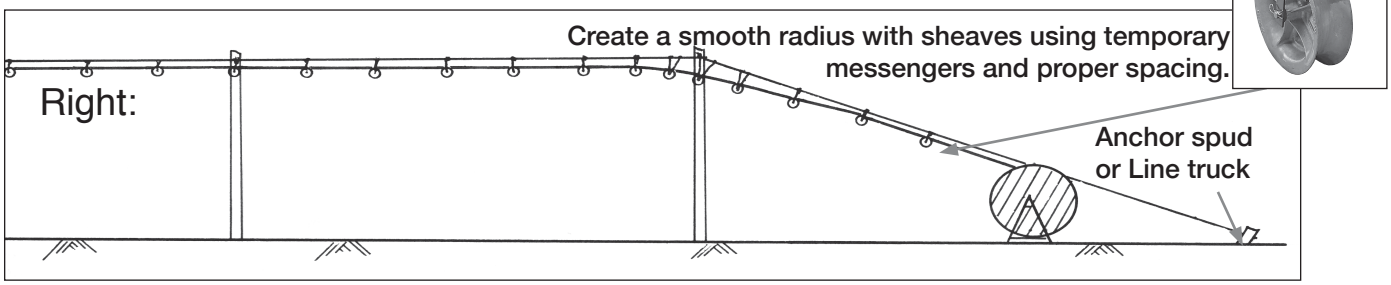

This method will support and distribute all bearing loads for successful cable installation.

Loading Cable Into Tray

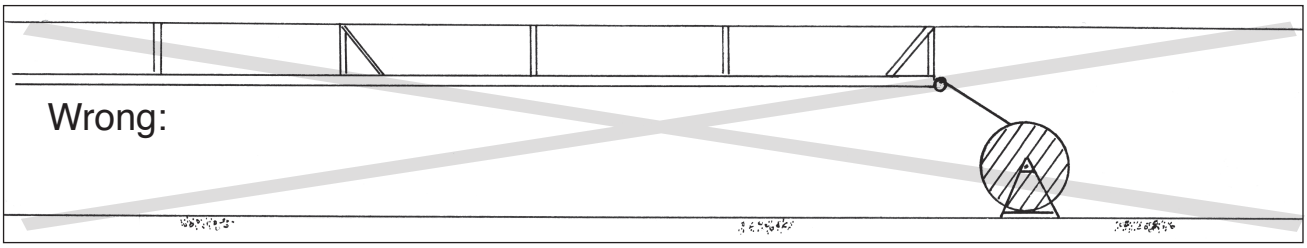

This method can cause sidewall pressure and crush the cable at the leading point. Lack of rollers will increase drag creating more tension.

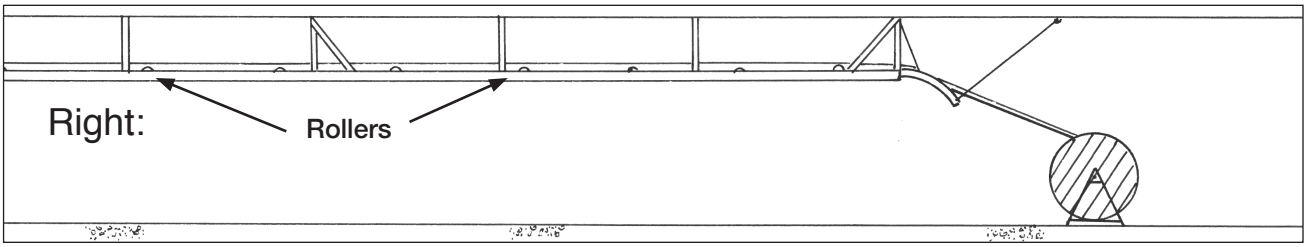

Use a large multi-wheel conveyor to distribute sidewall pressure. Lead and exit wheels must meet minimum cable bend. Use tray rollers to eliminate cable drag.

Service Wire Company believes the information presented herein is, to the best of our knowledge, true and accurate based on currently available industry data. However no warranties, either expressed or implied, are made as to the accuracy or completeness of any information contained herein. Consequently, Service Wire Company makes no guarantee of the results and assumes no obligation or liability whatsoever in connection with this information.

servicewire.com

Phoenix, AZ
877-623-9473

Culloden, WV
800-624-3572

Houston, TX
800-231-9473

RETURN to Table of Contents

Tray Roller Assembly

- It is important that these assemblies be aligned and secure.
- Shifting of roller assemblies can cause the cable to climb over sheave edge and cut the cable.
- All rollers to be free rolling to eliminate friction.
- Space tray rollers to minimize cable drag.
- Use greater bending radii than allowed.

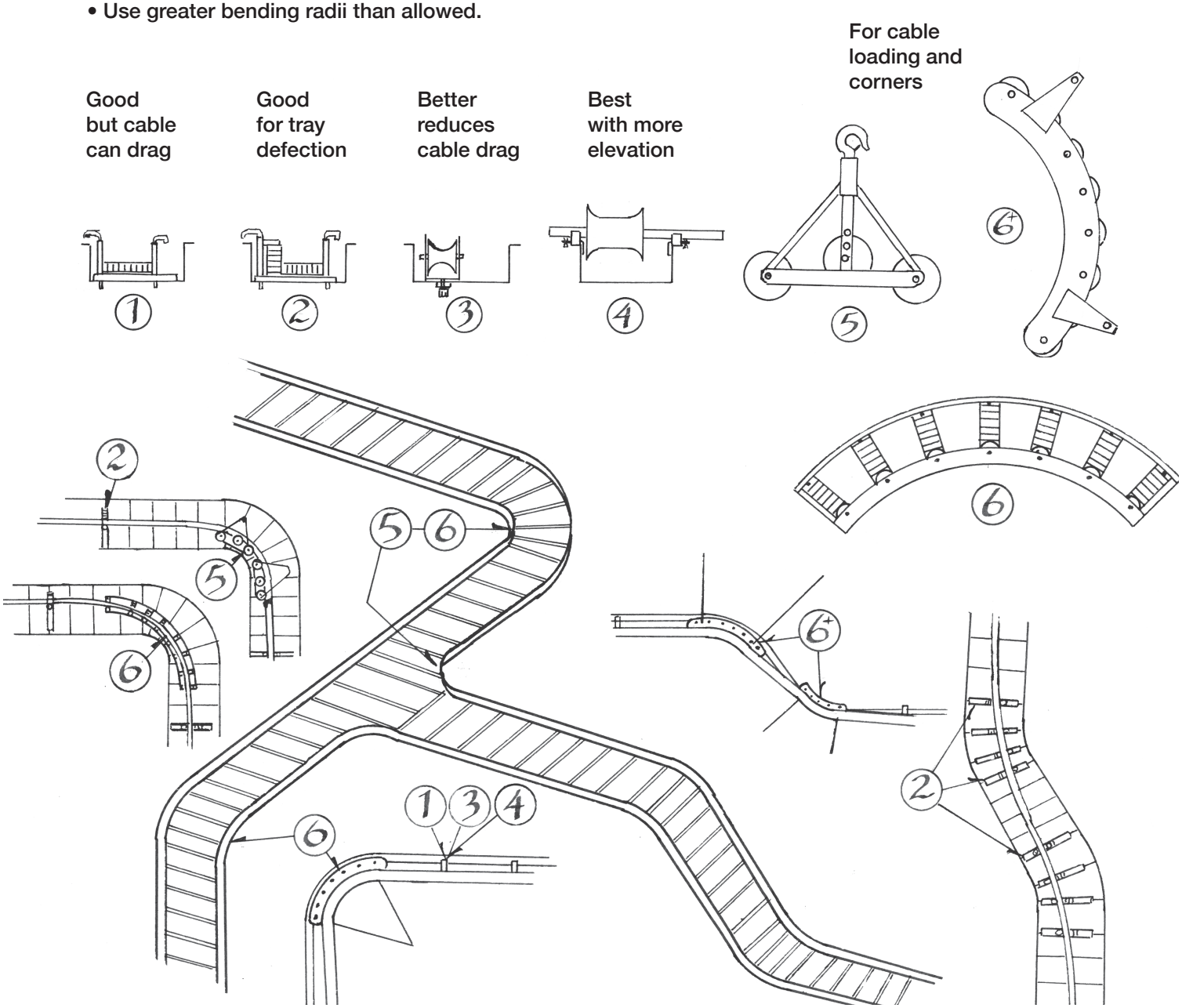

Service Wire Company believes the information presented herein is, to the best of our knowledge, true and accurate based on currently available industry data. However no warranties, either expressed or implied, are made as to the accuracy or completeness of any information contained herein. Consequently, Service Wire Company makes no guarantee of the results and assumes no obligation or liability whatsoever in connection with this information.

servicewire.com

Phoenix, AZ
877-623-9473

Culloden, WV
800-624-3572

Houston, TX
800-231-9473

RETURN to Table of Contents

ServiceWireCo.
Manufacturing quality. Delivering service.
Made in the USA
ISO 9001:2008

Useful Conversion Factors

AWG to Metric

AWG	MM²	CMIL	Diameter (inches)
22	0.32	640	0.029
20	0.52	1,020	0.036
18	0.82	1,620	0.046
16	1.31	2,580	0.058
14	2.08	4,110	0.073
12	3.31	6,530	0.092
10	5.26	10,380	0.116
9	6.63	13,090	0.130
8	8.38	16,510	0.146
6	13.20	26,240	0.184
4	21.20	41,740	0.232
3	26.70	52,620	0.260
2	33.60	66,360	0.292
1	42.40	83,690	0.332
1/0	53.50	105,600	0.373
2/0	67.40	133,100	0.419
3/0	85.00	167,800	0.470
4/0	107.00	211,600	0.528

Kcmil	MM²	CMIL	Diameter (inches)
250	126.00	250,000	0.575
300	152.00	300,000	0.630
350	177.00	350,000	0.681
400	202.00	400,000	0.728
500	253.00	500,000	0.813
550	278.00	550,000	0.855
600	304.00	600,000	0.893
700	354.00	700,000	0.964
750	380.00	750,000	0.998
900	456.00	900,000	1.094
1,000	506.00	1,000,000	1.152

Miscellaneous Conversions		
Unit	**Multiply By**	**To Get**
Centimeters	0.3937	Inches
Circular Mils	0.7854	Square Mils
Cubic Centimeters	5.0671×10^{-4}	Square Millimeters
Cubic Centimeters	0.0610	Cubic Inches
Cubic Inches	16.386	Cubic Centimeters
Inches	2.54	Centimeters
Kilograms	2.2046	Pounds
Kilograms/Kilometer	0.6720	Pounds/1000'
Kilometers	0.6214	Miles
	3280.8	Feet
Meters	3.2808	Feet
Mils	0.001	Inches
	0.0254	Millimeters
Miles	1.609	Kilometers
Millimeters	0.03937	Inches
OHMS/Kilometer	0.3048	OHMS/1000'
OHMS/1000'	3.2808	OHMS/Kilometer
Pounds	0.4536	Kilograms
Pounds/1000'	1.4881	Kilograms/Kilometer
Square Centimeters	1.55×10^{5}	Square Mils
	1.97×10^{5}	Circular Mils
Square Inches	1.2732×10^{6}	Circular Mils
	645.16	Square Millimeter
Square Millimeters	1,973.5	Circular Mils

Service Wire Company believes the information presented herein is, to the best of our knowledge, true and accurate based on currently available industry data. However no warranties, either expressed or implied, are made as to the accuracy or completeness of any information contained herein. Consequently, Service Wire Company makes no guarantee of the results and assumes no obligation or liability whatsoever in connection with this information.

servicewire.com

Phoenix, AZ
877-623-9473

Culloden, WV
800-624-3572

Houston, TX
800-231-9473

RETURN to Table of Contents

Service Wire Co.
Manufacturing quality. Delivering service.
Made in the USA
ISO 9001: 2008

TERMS and CONDITIONS

All sales of material by Service Wire Company are expressly conditioned upon the terms and conditions set forth below. Any additional or different terms or conditions set forth in the purchase order of the Purchaser or in any similar such communication are hereby objected to by Service Wire Company and shall not be binding nor effective unless assented to in writing by an officer of Service Wire Company. Terms and Conditions are subject to change without notice.

PRICES

Unless otherwise stated, all prices by Service Wire Company are subject to change without notice. Prices do not include sale, use, excise, value added or similar taxes and, where applicable, such taxes shall be as a separate item and paid by the Purchaser. Any deviation after placement of order such as changes in quantity or partial release or change in ship dates may increase price.

DELIVERY

Delivery commitments are based upon the best information present at time of quotation and/or time of order entry, but may change due to conditions beyond Service Wire Company's control. Service Wire shall have no liability whatsoever for failure to meet delivery or shipment schedules. Delivery must be within 30 days after receipt of order or manufacturing lead time. Extended requested delivery dates are subject to price revisions or cancellation of the order by Service Wire Company. Service Wire reserves the right to invoice buyer immediately if customer delays delivery. In addition after 30 days, storage charges will be charged to buyer at a minimum rate of one-half of one percent of the invoice amount per month. Buyer's order is accepted subject to Service Wire being able to obtain the necessary raw materials and subject to government priorities and other government regulations that may be issued from time to time. Availability of items quoted as "stock" are done so on a "subject to prior sales" basis.

PAYMENT

Each shipment shall be deemed to have been sold under a separate and independent contract. Payment is due and Payable thirty (30) days after invoice date unless otherwise specified. A finance charge of 1 ½% per month will be added to the unpaid balance on all accounts not paid in full on or before the due date. The finance charge is equivalent to an annual percentage rate of 18%. Time is of the essence and, in addition to any other rights, Service Wire shall further have the right, at its option, to terminate this agreement without notice to Buyer if payment is not made on or before the due date or if Buyer becomes insolvent, or if Buyer's ability to pay debts in the normal course of business otherwise becomes impaired. If, in the judgment of Service Wire, the financial condition of the Purchaser at the time of manufacture or shipment does not justify the terms or payment specified, Service Wire reserves the right to require full or partial payment before manufacture or shipment and to suspend any further performance until such payment has been received.

QUANTITY VARIATION

On all orders, quantities are subject to a quantity variation of plus or minus ten percent (10%) unless otherwise specified or agreed upon.

RETURNED GOODS

No credit will be allowed for goods returned without Service Wire's prior authorization, nor will Service Wire accept responsibility for return shipping costs. Buyer has a duty to inspect all materials upon receipt and failure to object in writing within seven (7) days of receipt shall constitute an irrevocable acceptance of the goods and a waiver of any and all claims relating to those goods. Merchandise cut to Buyer's measurements, or manufactured to Buyer's specifications, are non-cancelable and non-returnable.

LIMITED WARRANTY

All Service Wire products are carefully inspected, tested, and packed before shipment and are receipted for by carrier in first class condition. Should any goods or materials prove defective due to defects in manufacture within one (1) year from invoice date, upon written notice to Service Wire, such material shall be replaced F.O.B. original destination point. This guarantee covers the cost of replacement of the product only and does not include the cost for installation, shipping, and handling. In no event will Service Wire be liable to the purchaser or the ultimate user of its product or any other party, for any damages, including but not limited to, loss of profits, loss of use, cost to repair, replacement of damaged goods or property; or any other incidental or consequential damages arising out of the use of the product, even if Service Wire its agents or representatives, has been advised of the possibility of such damages. This warranty is expressly in lieu of all other warranties expressed or implied including the warranties for labor charges, or merchantability, and of fitness for a particular purpose, and shall be voided if any work or modification is performed on the product without factory authorization. This limited warranty represents the complete and exclusive agreement between Service Wire and Buyer concerning warranties of the product and supersedes any proposal or prior agreement, oral or written, and any communications between Service Wire and Buyer concerning the product.

servicewire.com

Phoenix, AZ
877-623-9473

Culloden, WV
800-624-3572

Houston, TX
800-231-9473

Service Wire Co.
Manufacturing quality. Delivering service.
Made in the USA
ISO 9001:2008

CANCELLATION

Orders for Product cut to Buyer's measurements or manufactured to Buyer's specifications may not be cancelled. All other orders may be cancelled by Purchaser based upon payment to Service Wire of reasonable and proper cancellation charges pursuant to Service Wire's pricing policy or as determined by mutual agreement.

ASSIGNMENT

Any assignment of any contract/order, or any right thereunder, by the Purchaser without the advance written consent of Service Wire shall be void.

HAZARDOUS BUSINESS

Service Wire's products are designed and manufactured for use in standard industrial and commercial applications. If our products are to be applied in any location which might be of a hazardous nature, such as atomic installations, commercial or military aircraft, missile installations, space explorations or other critical applications where a failure of a single component could cause substantial harm to persons or property, Service Wire disclaims all responsibility. Such concurrence must be signed by an officer of Service Wire Company.

GENERAL TERMS

Any of the terms and provisions of Buyer's order which are inconsistent with the terms and provisions hereof shall not be binding on Service Wire Company and shall not be considered applicable to the sale or shipment of the merchandise referred to herein. Unless Buyer shall notify Service Wire in writing to the contrary as soon as practicable after receipt of quotation by Buyer, acceptance of the terms and conditions hereof by Buyer shall be indicated, and, in the absence of such notification, the sale and shipment by Service Wire of the merchandise covered hereby shall be conclusively deemed to be subject to the terms and conditions herein. A standard, form purchase order or similar document shall not constitute written objection to the terms herein. Rather a written objection must be separately stated, and addressed to "Attn: Credit Manager, Service Wire Company, 310 Davis Road, Culloden, WV 25510," and must state with particularity those specific terms to which Buyer objects. In the event this written notice is not timely sent, before shipment or delivery of the product, then Buyer waives any and all rights to object to the terms herein.

ATTORNEY'S FEES, JURISDICTION AND VENUE

Buyer agrees that in the event there is a dispute between Buyer and Service Wire, each party will pay their individual costs of such proceedings, including but not limited to attorney fees, court costs and other costs (including without limitation all expert witness or other fees incurred, and any and all costs charged by any law firm or attorney. Buyer agrees that any and all disputes with Service Wire, including not just contract but also tort claims, shall be resolved in the state or federal courts situated in Cabell County, West Virginia, and that these courts shall have the exclusive jurisdiction over all such disputes and Buyer consents to personal jurisdiction in these courts. Any legal action brought by Buyer against Seller shall be filed in the above referenced jurisdiction within one (1) year after the cause of action arises or it shall be deemed forever waived.

INTELLECTUAL PROPERTY AND INDEMNIFICATION

Service Wire Company makes no warranty or representation with regard to any patent, trademark, copyright, trade dress, or trade secret, relating to or claimed to arise from any product sold to Buyer. Service Wire will not and does not indemnify or otherwise hold harmless Buyer from any claim of misappropriation or infringement of any patent, trademark, trade dress, trade secret, copyright or other rights relating to any product. Buyer agrees that Buyer will not make any such claim, or seek any such indemnification, and that such a claim or demand by Buyer constitutes a breach of these Standard Terms, and that Buyer shall pay all attorney fees and other court costs incurred by Service Wire in defending against any such claim or demand, whether or not a legal action is commenced or filed.

servicewire.com

Phoenix, AZ
877-623-9473

Culloden, WV
800-624-3572

Houston, TX
800-231-9473